Table of Contents

Nonincendive Applications in Division 2

eurofast™ cords with receptacles, *lokfast*™ guards or V**fast*™ connectors 2-3

eurofast™ junction boxes with integral home-run cable 4

eurofast™ junction boxes with home-run connectors 5-7

Field device connections to *eurofast*™ junction boxes 8,9

minifast™ armored (*armorfast*™) and non-armored cords, with receptacles, *lokfast*™ guards, or V**fast*™ connectors 10-12

minifast™ junction boxes 13-16

Field device connections to *minifast*™ junction boxes 17,18

Conduit body adaptors to *minifast*™ and *eurofast*™ cords 19,20

Splitters and Tees for *minifast*™ and *eurofast*™ cords 21

Intrinsically Safe Applications in Divisions 1 & 2

eurofast™ cords and receptacles 22,23

eurofast™ junction boxes 24,25

Intrinsic Safety wiring diagrams for *eurofast*™ junction boxes 26-29

Field device connections to *eurofast*™ junction boxes 30-34

minifast™ armored (*armorfast*™) and unarmored cords and receptacles 35,36

minifast™ junction boxes 37-40

Intrinsic Safety wiring diagrams for *minifast*™ junction boxes 41-44

Field device connections to *minifast*™ junction boxes 45-49

Explosionproof Applications

minifast™ explosionproof feed-thru receptacles 50-53

minifast™ MC-HL receptacle extensions and cords 54

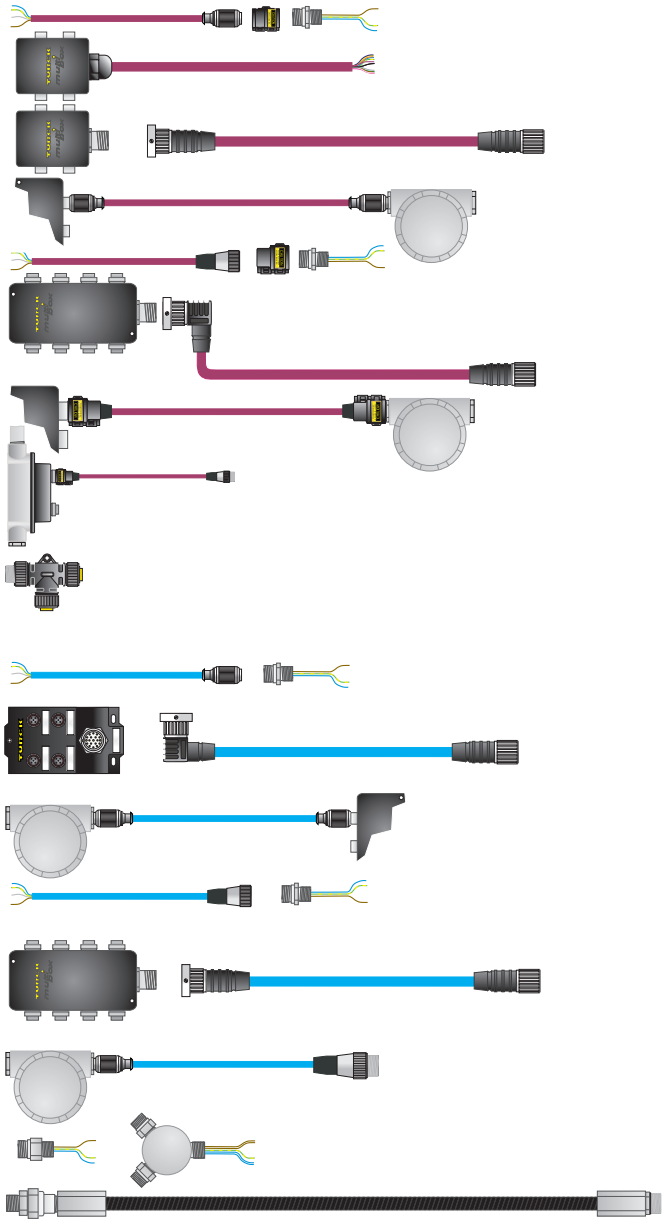

Rev	Description	Date
J	Add double-ended 'EXG' models	11/6/13
H	Misc Model Code Corrections, add minifast DD panel cut-out receptacles	9/10/13
G	Add RS.B/RK.B, add MC-HL receptacles, add right-angle minifast for Div 2	1/25/13

This document is the property of Turck Inc. The use of this document without written permission is prohibited.

TURCK
3000 Campus Drive
Minneapolis, MN
55441-2656
1-800-544-7769
(763) 553-7300
(763) 553-0708 fax
www.turck.com

Drawing No. QCF-00147

Title Control Drawing for FM Approved Turck ***multibox*** Junction Box Process Wiring System

Scale None

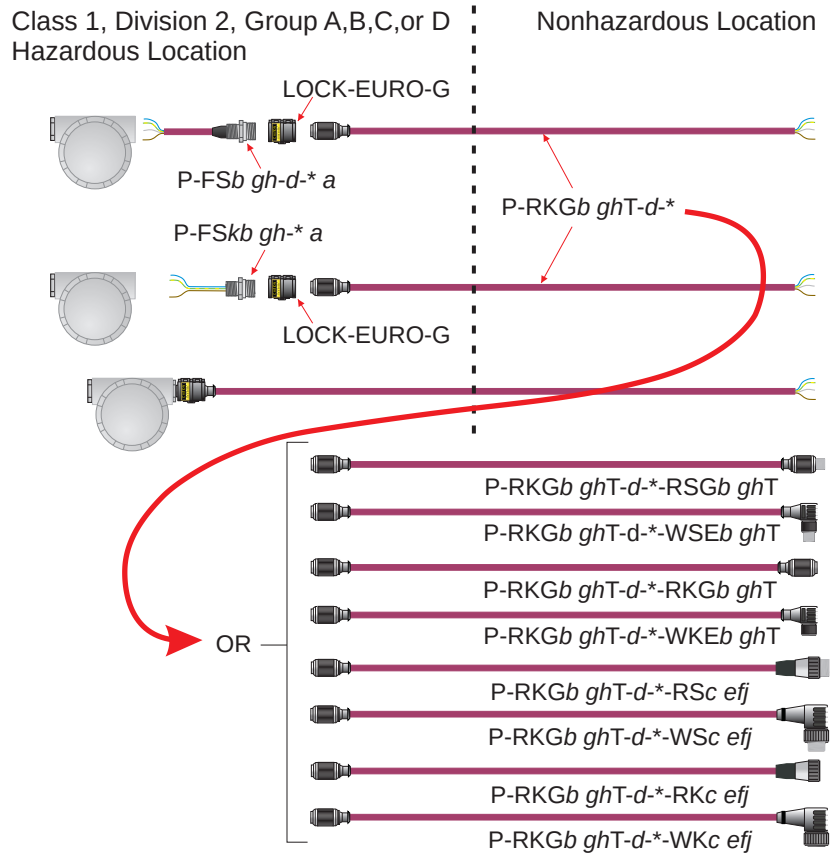

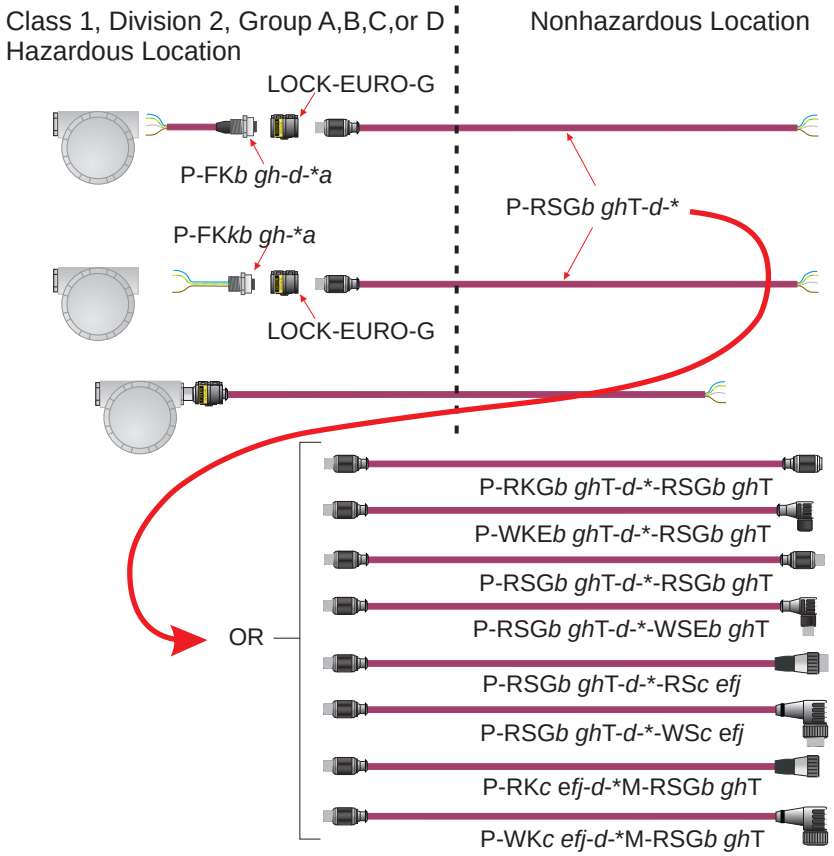

Notes:

1. Key: *a* = /14.5/NPT, /14.75/NPT, /M20, or blank *b* = V or blank *c* = M or V *d* = 3 or 4-digit ITC or PLTC cable number *e* = 2, 3, 4, 5, or 6
f = 0, 1, 2, 3, . . . 9, 01, 02, 03, . . . 99 *g* = 4 or 5 *h* = .1, .2, .3, ...99, or blank *j* = H or blank *k* = P or blank

= Nonincendive equipment, FM approved for installation in Class I, Division 2

2. The installation must be in accordance with the National Electrical Code (NEC), ANSI/NFPA 70. Specific requirements for the installation of PLTC rated and ITC rated cable may be found in Article 501, Article 725 and Article 727.
3. *lokfast* guards on quick-disconnects require a tool to disconnect, rendering the connection not normally arcing.
4. The molded construction of the cordset and the gas/vaportight continuous sheath of the cable meet the requirements of the NEC, Article 501, for cable seals in Class I, Division 2.

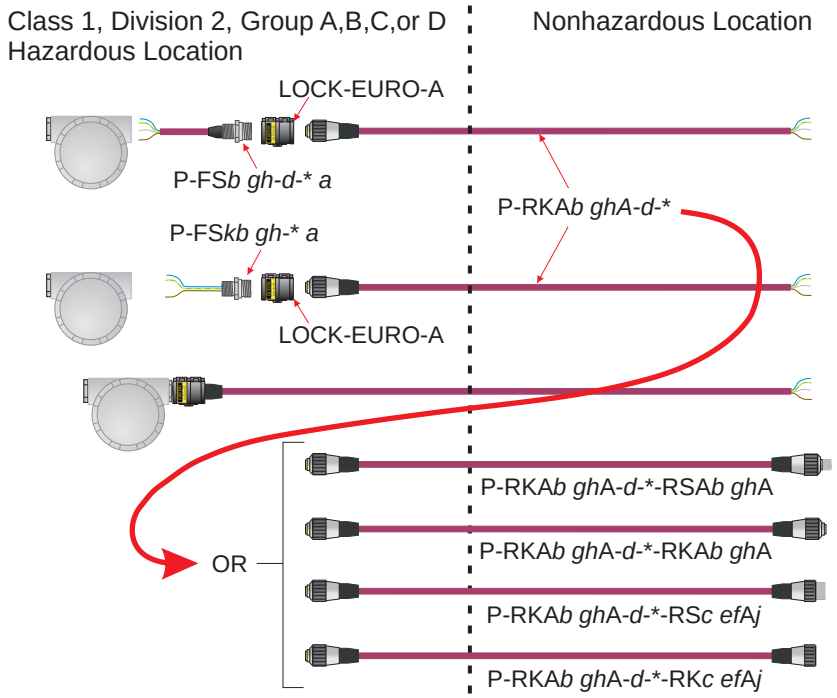

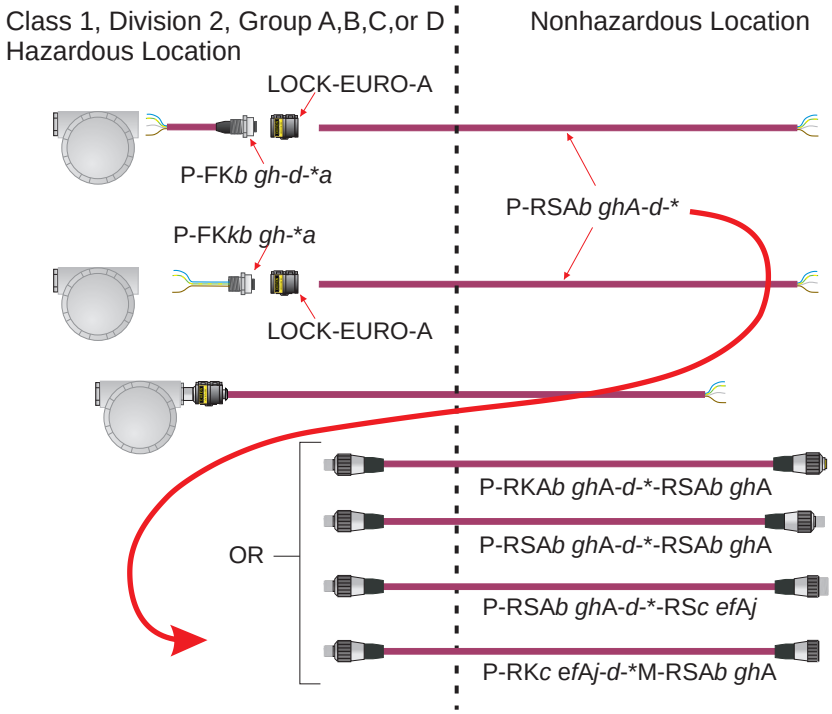

Notes:

1. Key: *a* = /14.5/NPT, /14.75/NPT, /M20, or blank *b* = V or blank *c* = M or V *d* = 3 or 4-digit ITC or PLTC cable number
   e = 2, 3, 4, 5, or 6 *f* = 0, 1, 2, 3, . . . 9, 01, 02, 03, . . 99 *g* = 4 or 5 *h* = .1, .2, .3, ...99, or blank *j* = H or blank *k* = P or blank
   = Nonincendive equipment, FM approved for installation in Class I, Division 2

2. The installation must be in accordance with the National Electrical Code (NEC), ANSI/NFPA 70. Specific requirements for the installation of PLTC and ITC rated cable may be found in Article 501, Article 725 and Article 727.

3. *lokfast* guards on quick-disconnects require a tool to disconnect, rendering the connection not normally arcing.

4. The molded construction of the cordset and the gas/vaportight continuous sheath of the cable meet the requirements of the NEC, Article 501, for cable seals in Class I, Division 2.

TURCK 3000 Campus Drive Minneapolis, MN 55441-2656	Drawing No. QCF-00147		Rev J
	Scale None	Sheet 3 of 54	

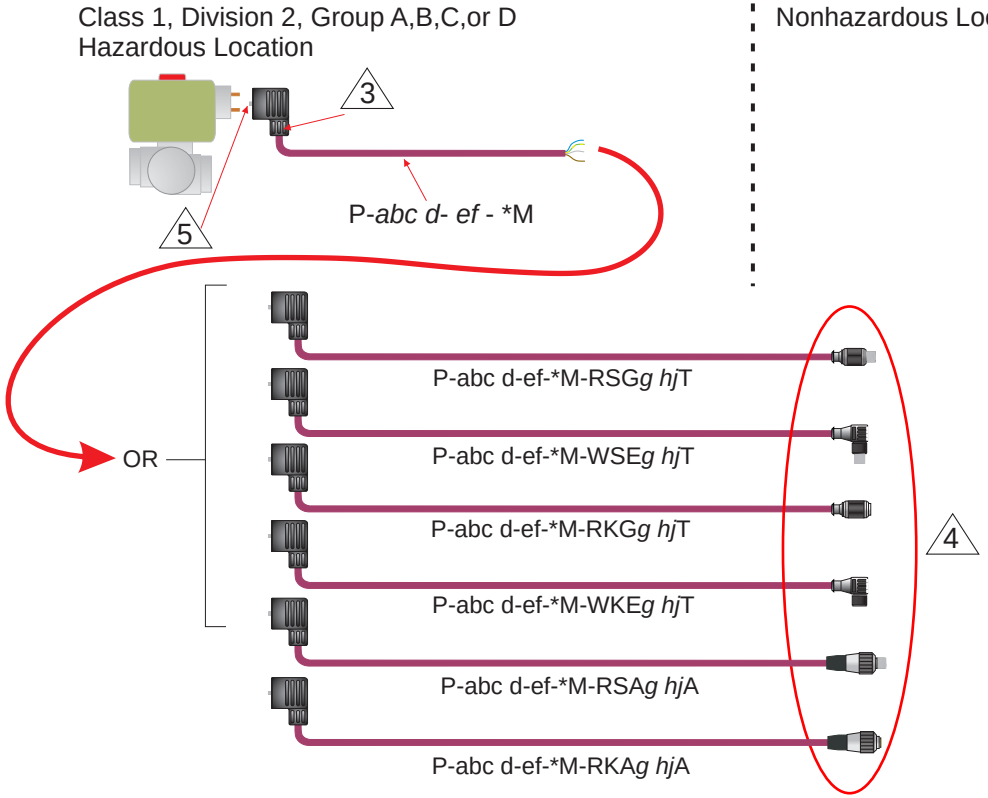

Notes:

1. Key:

a = Cable exit orientation T or V

b = DIN 43650 Type A, B, I, C8 or C9

c = Body color G, S or Y

d = Pinout 2, 21, 22, or 3

e = Wiring Code A, B, C, D, E, F, L, M, N, P, R
(A, B, C, D, E, F for use with DIN Type A, B or I;
A, L, M, N, P, R for use with DIN Type C8 or C9)

f = 3 or 4-digit ITC or PLTC cable number

g = Coupling nut material V or blank

h = Number of conductors 4 or 5

j = Connection code .1, .2, .3, ...99, or blank

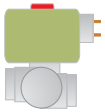

= Nonincendive equipment, FM approved for installation in Class I, Division 2; with an integral connector per DIN 43650, Type A (18 mm contact spacing), Type B (10 mm contact spacing), Type I (11 mm contact spacing), Type C8 (8 mm contact spacing) or Type C9 (9.4 mm contact spacing).

2. The installation must be in accordance with the National Electrical Code (NEC), ANSI/NFPA 70. Specific requirements for the installation of PLTC rated and ITC rated cable may be found in Article 501, Article 725 and Article 727.

3. The molded DIN 43650 valve plug does not meet the requirements of the NEC, Article 501, for cable seals in Class I, Division 2. Therefore, when the installation requires cable sealing, single-ended DIN 43650 cordsets must be entirely installed in Division 2 - e.g the cable must not cross the boundary to an unclassified location and the cable must be terminated in a manner in accordance with the NEC..

4. The construction of the eurofast molded connector end and the gas/vaportight continuous sheath of the cable meet the requirements of the NEC, Article 501, for cable seals in Class I, Division 2.

5. The fastening screw requires a tool to disconnect, rendering the connection not normally arcing. The fastening screw must be engaged at all times when the circuit is live.

6. The wiring codes indicate the following pin-outs:

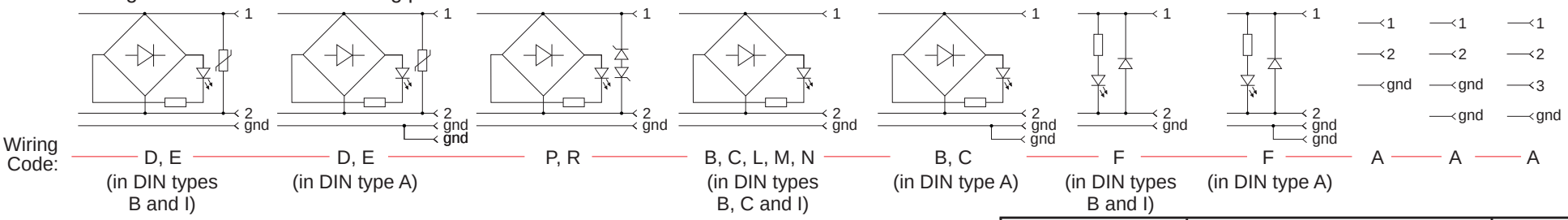

TURCK 3000 Campus Drive Minneapolis, MN 55441-2656	Drawing No. QCF-00147		Rev J
	Scale None	Sheet 4 of 54	

Class I, Division 2, Group A,B,C, or D Hazardous Location

Nonhazardous Location

Additional port number/type description groups when all ports are not identical

P- *a* VBM *b* *c def* *def* def *def* - *g* - *h*M - *jkmnq*

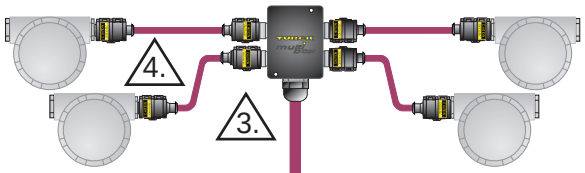

Additional port number/type description groups when all ports are not identical

P- *a* VBM *b* *c def* *def* def *def* - *g* - *h*M - *jkmnq*

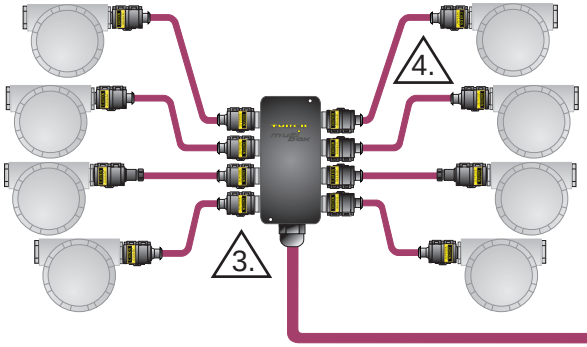

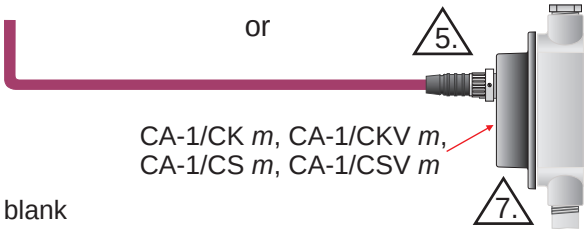

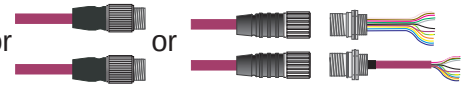

P-CKFL*b mn* - *h*/*p*
P-CKFD*b* mn - *h*/*p*
P-CSFL*b* mn - *h*/*p*
P-CSFD*b mn* - *h*/*p*

5.

6.

P-CKFL*b mn* - *h* -*/p
P-CKFD*b mn* - *h* -*/p
P-CSFL*b mn* - *h* -*/p
P-CSFD*b mn* - *h* -*/p

a = Housing material: SS- or blank
b = Port connector material: V or blank
c = Total number of ports: 3, 4, 5, 6, 7 or 8
d = Number of a given type if all ports are not identical: -1, -2, -3, -4, -5, -6, -7 or blank
e = Number of port conductors: 4 or 5
f = Wiring option: 0, .1, .2, .3, . . ., .99
g = 3 or 4-digit ITC or PLTC cable number
h = Cable length in meters
j = Molded home-run connector type: CSM, CSWM, CKM, CKWM, CSSM, RS, WS, RK, WK or blank

k = Home-run connector material/locking:
With CS../CK.. types - L, T, V or blank
With R./W. types - M or V
m = Number of home-run connector conductors: 7, 8, 9, 10, 12 or 19
n = Wiring option: 0, 1, 2, 3, . . . 9, 01, 02, 03, . . . 99
p = Option S613 or blank
q = Armor option: A or blank

Notes:

1. Field circuits may be installed using any of the combinations of equipment shown on sheets 8 and 9.
2. The installation must be in accordance with the National Electrical Code, ANSI/NFPA 70. Specific requirements for the installation of PLTC rated and ITC rated cable may be found in Article 501, and Articles 725 and 727.
3. The potted-in construction of the integral home-run cable and the gas/vaportight continuous sheath of the cable meet the requirements of the NEC, Article 501, for cable seals in Class I, Division 2.
4. *lokfast* guards on quick-disconnects require a tool to disconnect, rendering the connection not normally arcing.
5. When *j* = CSM..., CKM..., CSSM..., CXM..., RS., RK., WS., or WK., a connector is molded to the end of the home-run cable. When connection is made to a fixed receptacle in the hazardous location, molded CS./CK. connectors must have *k* = L or T indicating a locking coupling nut; R./W. connectors must be locked with a *lokfast* guard. When the connection is made in the nonhazardous location, locking type coupling nuts or *lokfast* guards are not required.
6. When *j* = RS, WS, RK or WK, a *minifast* B- or C-size connector is molded to the end of the home-run cable for installation per Turck control drawing Ni-2.407.
7. See Sheet 19 for installation of CA-... conduit body adaptors.

TURCK 3000 Campus Drive Minneapolis, MN 55441-2656	Drawing No. QCF-00147		Rev J
	Scale None	Sheet 5 of 54	

Class I, Division 2, Group A,B,C, or D Hazardous Location

Additional port number/type description groups when all ports are not identical

P- *a* VBM *b* *c def* *def* def *def* - CS*bhj*

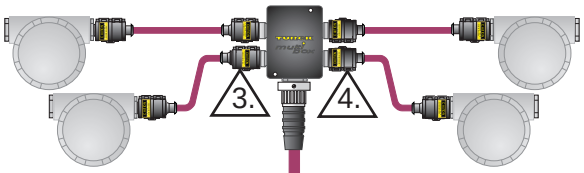

Additional port number/type description groups when all ports are not identical

P- *a* VBM *b* *c def* *def* def *def* - CS*bhj*

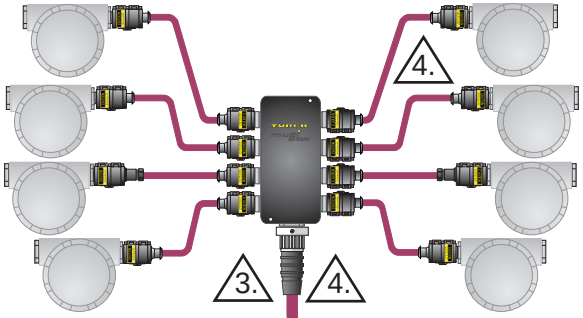

P-CKM*p hjm - k - g*

or

When connection is made to a fixed receptacle in the hazardous location (e.g. - P-C.F. receptacle or CA-.. conduit body adaptor), the molded connector must have *x* = L or T indicating locking coupling nut.

or

When the connection of a .CSM., .CSWM.,.CKM., or .CKWM. connector is made to an extension cord in the hazardous location, the connection must be the locking type: .CSML., CSWML., .CSMT., .CSWMT., .CKML.., .CKWML., .CKWMT., or .CKMT.

or

When the connection of a .CSSM. or .CXM. connector is made to an extension cord in the hazardous location, the cord must be the locking type: .CSML., .CSWML.,.CSMT., .CSWMT., .CKML., .CKWML., .CKMT or .CKWMT.

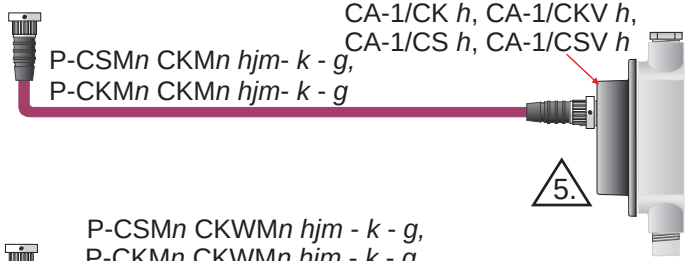

P-CSM*n* CKWM*n hjm - k - g*,
P-CKM*n* CKWM*n hjm - k - g*

P-CSWM*n* CKM*n* hjm - *k - g*

P-CSWM*n* CKWM*n hjm - k - g*,
P-CKWM*n* CKWM*n hjm - k - g*

P-CSSM*b* CKM*n hjm - k - g*,
P-CKM*n* CXM*b hjm - k - g*

P-CSSM*b* CKWM*n hjm - k - g*,
P-CKWM*n* CXM*b hjm - k - g*

Nonhazardous Location

a = Housing material: SS- or blank
b = Material: V or blank
c = Total number of ports: 3, 4, 5, 6, 7 or 8
d = Number of a given type if all ports are not identical: -1, -2, -3, -4, -5, -6, -7 or blank
e = Number of port conductors: 4 or 5
f = Wiring option: 0, .1, .2, .3, . . ., .99
g = Cable or lead length in meters
h = Number of home-run conductors: 12 or 19
j = Wiring option: 1, 2, 3, . . . 9, 01, 02, 03, . . . 99
k = 3 or 4-digit ITC or PLTC cable number
m = A or blank *n* = L or T
p = L, T, V or blank *q* = /S613 or blank

P-CSM*p* CKM*n hjm - k - g*,
P-CKM*n* CKM*p hjm - k - g*

P-CKFL*b hjm - k - g/q*
P-CKFD*b hjm - k - g/q*
P-CSFL*b hjm - k - g/q*
P-CSFD*b hjm - k - g/q*
P-CKFL*b hj - g/q*
P-CKFD*b hj - g/q*
P-CSFL*b hj - g/q*
P-CSFD*b hj - g/q*

When the connection is made in the non hazardous location, locking type coupling nuts are not required.

Notes:

1. Field circuits may be installed using any of the combinations of equipment shown on sheets 8 and 9.
2. The installation must be in accordance with the National Electrical Code, ANSI/NFPA 70. Specific requirements for the installation of PLTC rated or ITC rated cable may be found in Article 501, and Articles 725 and 727.

3. The molded construction of the home-run cable and the gas/vaportight continuous sheath of the cable meet the requirements of the NEC, Article 501 for cable seals in Class I, Division 2. P-CKM... home-run connectors must either be securely connected to the junction box or plugged using a Turck CS-CC closure cap.

4. *lokfast* guards or set-screw construction on quick-disconnects require a tool to disconnect, rendering the connection not normally arcing.

5. See Sheet 19 for installation of CA-... conduit body adaptors.

TURCK 3000 Campus Drive Minneapolis, MN 55441-2656	Drawing No. QCF-00147		Rev J
	Scale None	Sheet 6 of 54	

Class I, Division 2, Group A,B,C, or D Hazardous Location

Nonhazardous Location

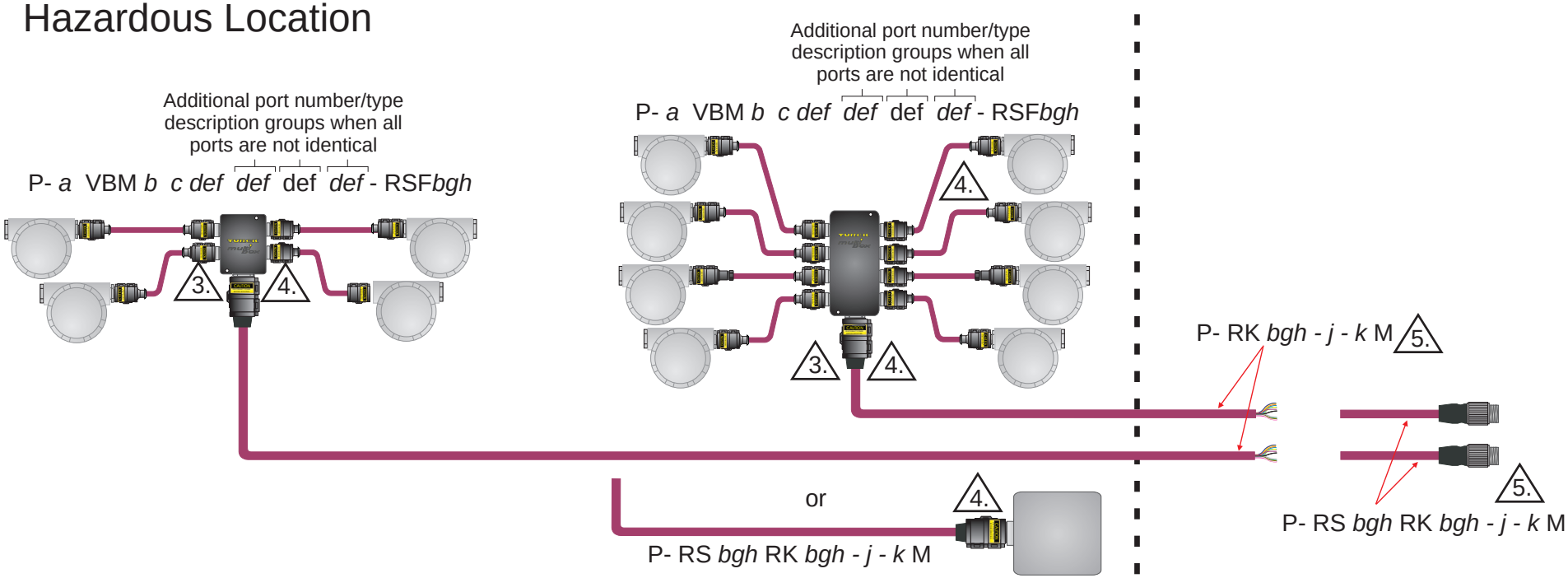

a = Housing material: SS- or blank
b = Port connector material: V or blank
c = Total number of ports: 3, 4, 5, 6, 7 or 8
d = Number of a given type if all ports are not identical: -1, -2, -3, -4, -5, -6, -7 or blank
e = Number of port conductors: 4 or 5
f = Wiring option: 0, .1, .2, .3, . . ., .99
g = Number of home-run connector conductors: 7, 8, 9, 10 12, or 19
h = Wiring option: 0, 1, 2, 3, . . . 9, 01, 02, 03, . . . 99 or blank
j = 3 or 4-digit ITC or PLTC cable number
k = Cable length in meters

Notes:

1. Field circuits may be installed using any of the combinations of equipment shown on sheets 8 and 9.
2. The installation must be in accordance with the National Electrical Code, ANSI/NFPA 70. Specific requirements for the installation of PLTC rated or ITC rated cable may be found in Article 501, and Articles 725 and 727.

3. The molded construction of the home-run cable and the gas/vaportight continuous sheath of the cable meet the requirements of the NEC, Article 501 for cable seals in Class I, Division 2. P-CKM... home-run connectors must either be securely connected to the junction box or plugged using a Turck CS-CC closure cap.

4. *lokfast* guards or set-screw construction on quick-disconnects require a tool to disconnect, rendering the connection not normally arcing.

5. Home-run cables may be installed per Turck control drawing Ni-2.407.

TURCK 3000 Campus Drive Minneapolis, MN 55441-2656	Drawing No. QCF-00147		Rev J
	Scale None	Sheet 7 of 54	

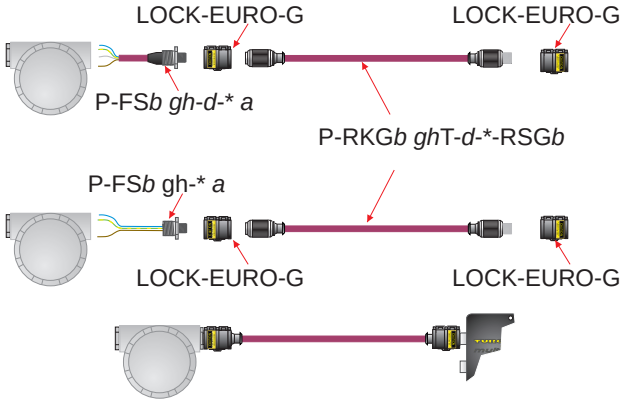

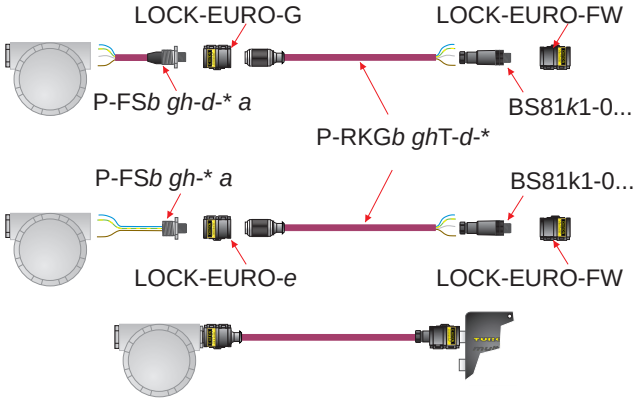

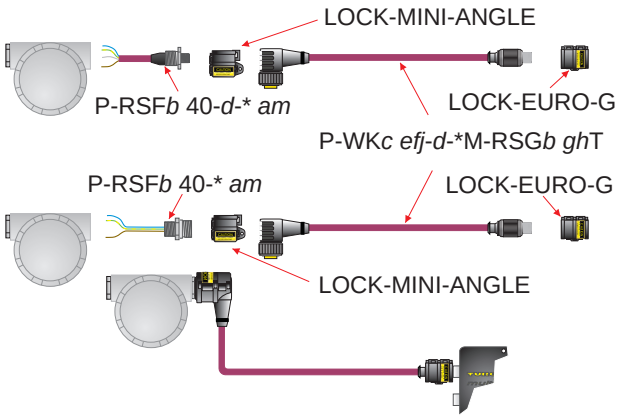

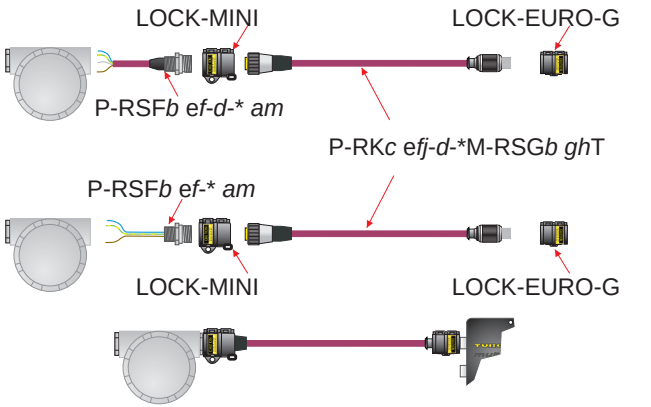

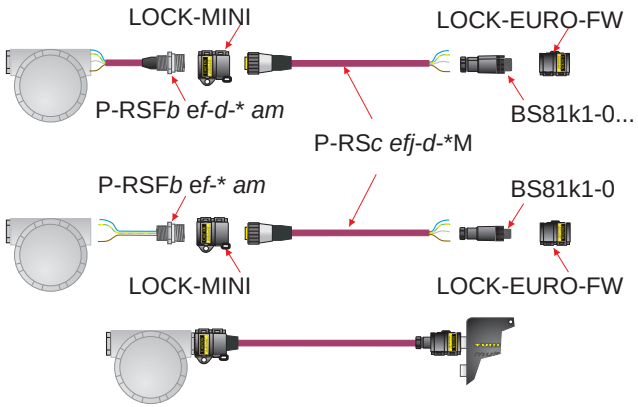

KEY

a = /14.5/NPT, /14.75/NPT, /M20, or blank
b = V or blank
c = M or V
d = 3 or 4-digit ITC or PLTC cable number
e = 2, 3, 4, 5, or 6
f = 0, 1, 2, 3, . . .9, 01, 02, 03, . . . 99
g = 4 or 5
h = .1, .2, .3, ...99, or blank
j = H or blank
k = 4, or 5
m = /S3256 or blank

= Nonincendive equipment, FM approved for installation in Class I, Division 2

= Turck multibox with *eurofast* port connectors, part numbers identified on Sheets 3-5.

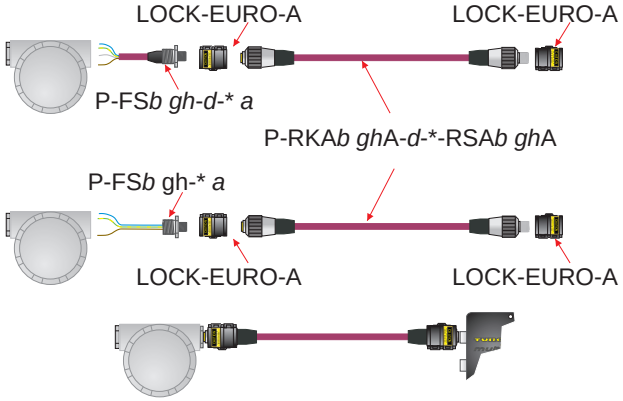

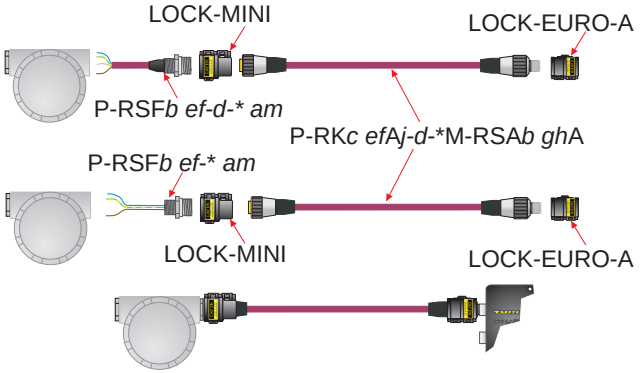

TURCK 3000 Campus Drive Minneapolis, MN 55441-2656	Drawing No. QCF-00147		Rev J
	Scale None	Sheet 8 of 54	

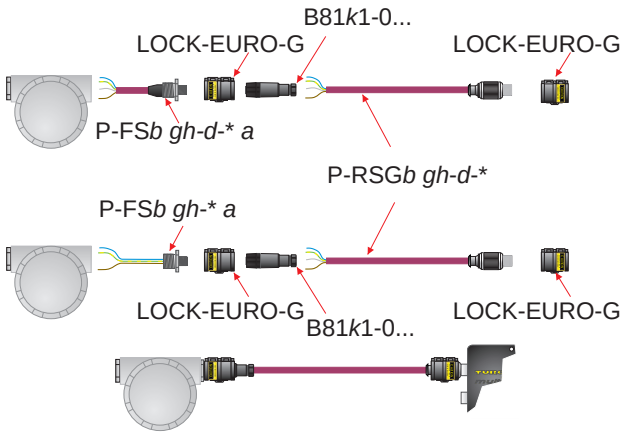

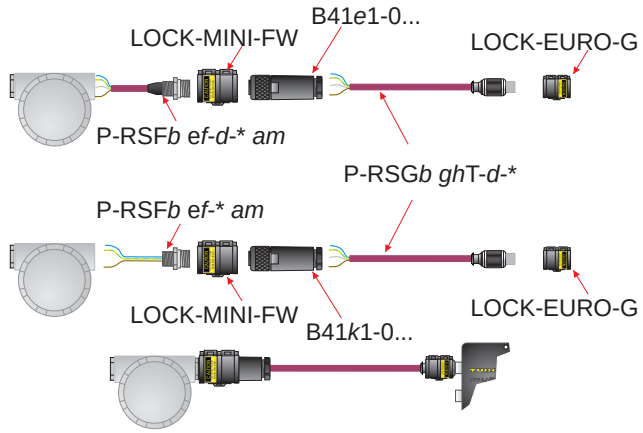

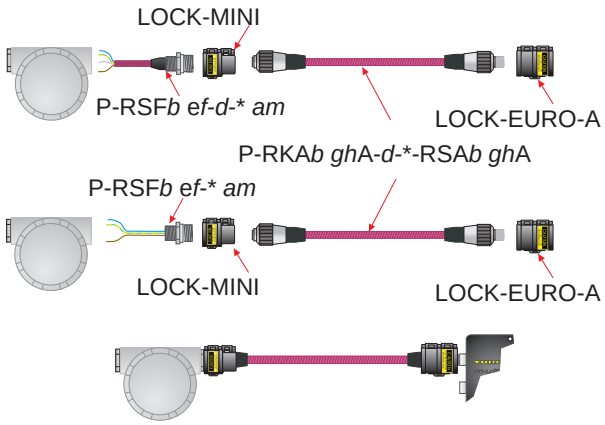

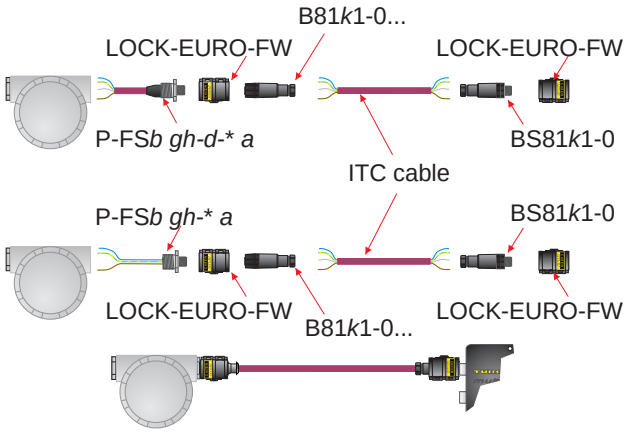

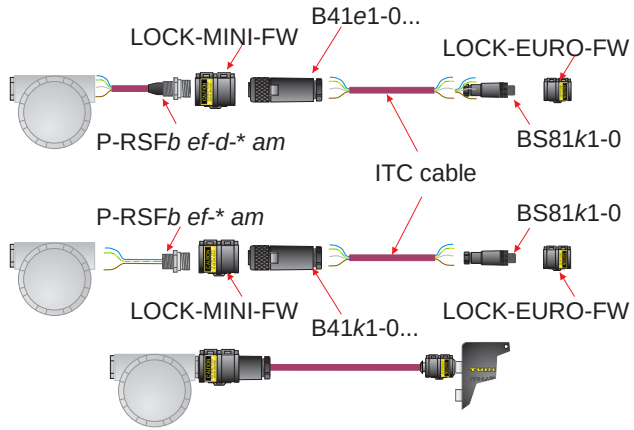

KEY

a = /14.5/NPT, /14.75/NPT, /M20, or blank

b = V or blank

c = M or V

d = 3 or 4-digit ITC or PLTC cable number

e = 2, 3, 4, 5, or 6

f = 0, 1, 2, 3, . . . 9, 01, 02, 03, . . . 99

g = 4 or 5

h = .1, .2, .3, ...99, or blank

k = 4, or 5

m = /S3256 or blank

= Nonincendive equipment, FM approved for installation in Class I, Division 2

= Turck multibox with *eurofast* port connectors, part numbers identified on Sheets 3-5.

TURCK 3000 Campus Drive Minneapolis, MN 55441-2656	Drawing No. QCF-00147		Rev J
	Scale None	Sheet 9 of 54	

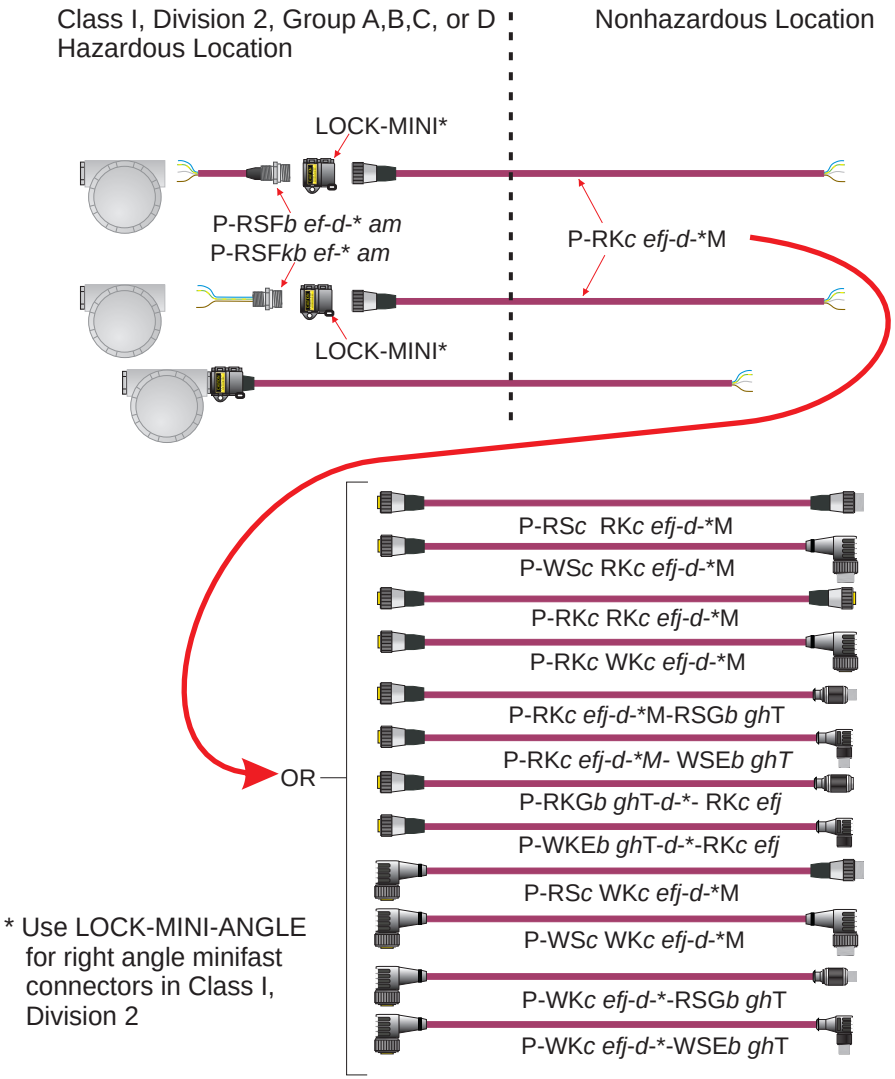

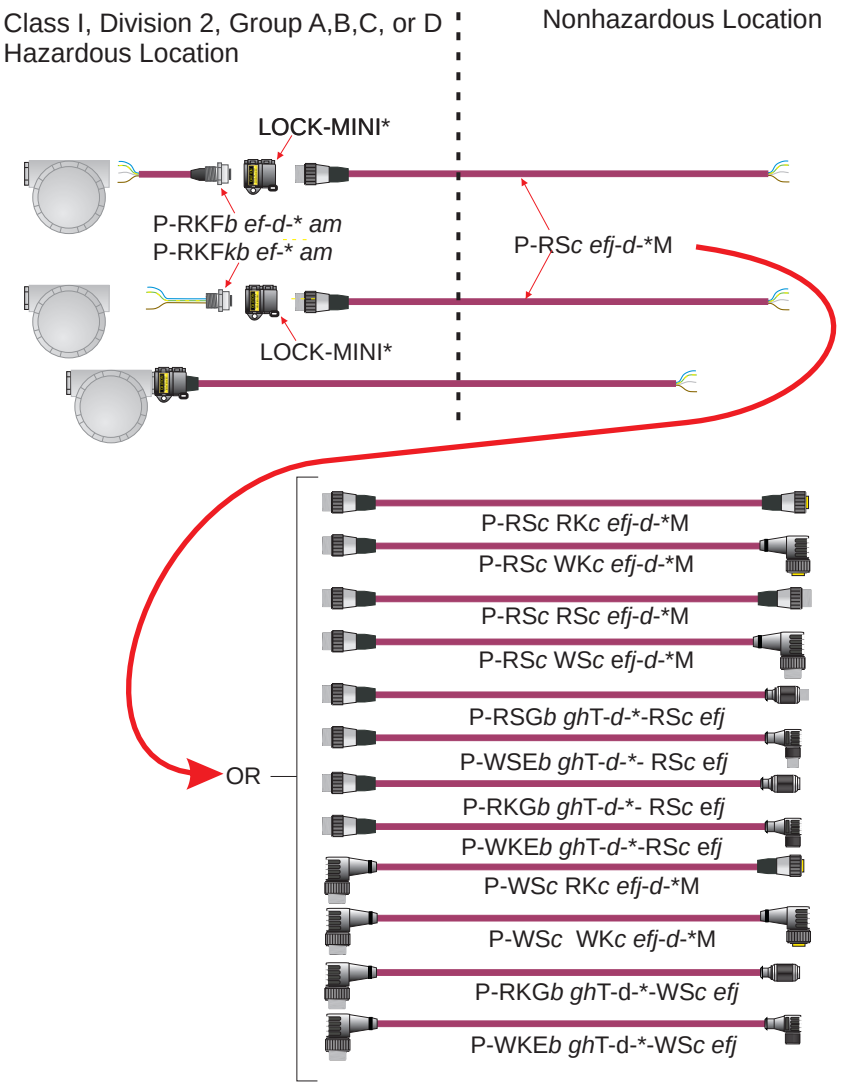

* Use LOCK-MINI-ANGLE for right angle minifast connectors in Class I, Division 2

Notes:

1. Key: *a* = /14.5/NPT, /14.75/NPT, /M20, or blank *b* = V or blank *c* = M or V *d* = 3 or 4-digit ITC or PLTC cable number *e* = 2, 3, 4, 5, or 6
   f = 0, 1, 2, 3, . . . 9, 01, 02, 03, . . . 99 *g* = 4 or 5 *h* = .1, .2, .3, ...99, or blank *j* = H or blank *k* = P or blank *m* = /S3256 or blank

   = Nonincendive equipment, FM approved for installation in Class I, Division 2

2. The installation must be in accordance with the National Electrical Code, ANSI/NFPA 70. Specific requirements for the installation of PLTC rated and ITC rated cable may be found in Article 501, Article 725 and Article 727.

3. *lokfast* guards on quick-disconnects require a tool to disconnect, rendering the connection not normally arcing.

4. The molded construction of the cordset and the gas/vaportight continuous sheath of the cable meet the requirements of the NEC, Article 501, for cable seals in Division 2.

TURCK 3000 Campus Drive Minneapolis, MN 55441-2656	Drawing No. QCF-00147		Rev J
	Scale None	Sheet 10 of 54	

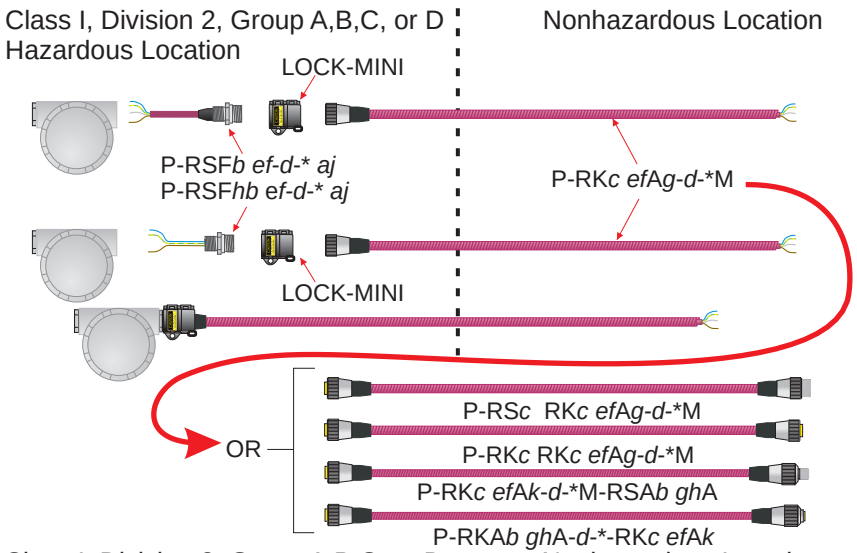

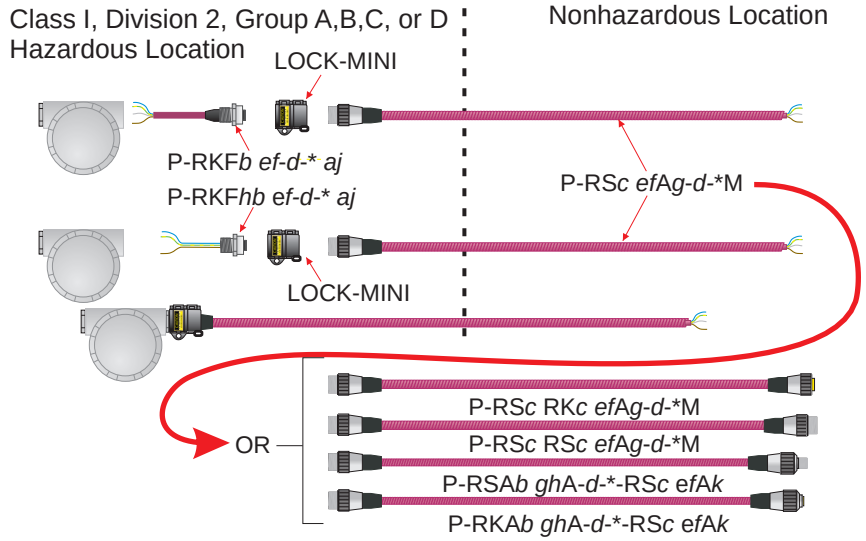

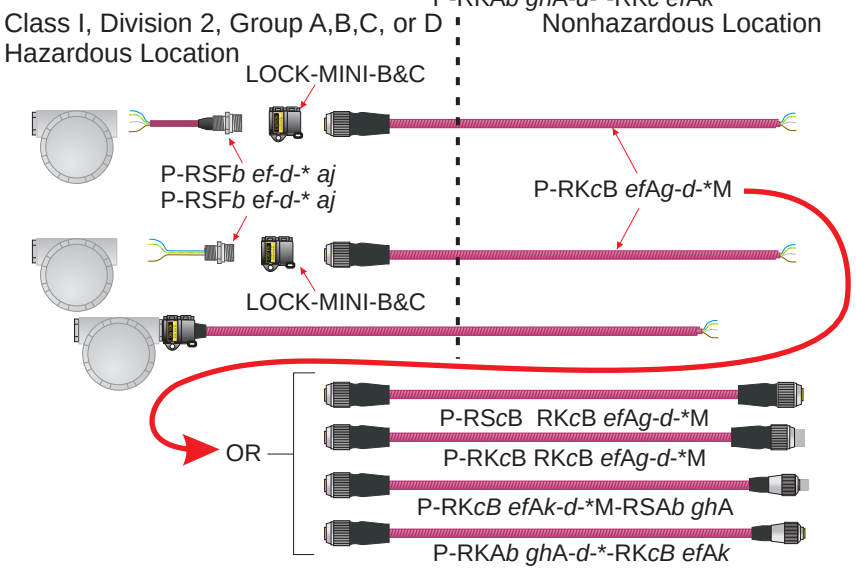

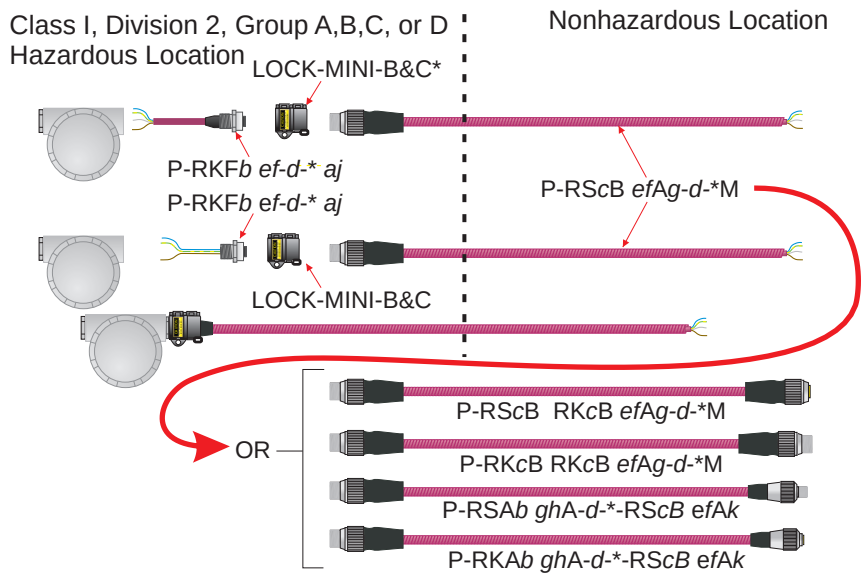

Notes:

1. Key: *a* = /14.5/NPT, /14.75/NPT, /M20, or blank *b* = V or blank *c* = M or V *d* = 3 or 4-digit ITC or PLTC cable number *e* = 2, 3, 4, 5, or 6
   f = 0, 1, 2, 3, . . . 9, 01, 02, 03, . . . 99 g = H or blank *h* = P or blank *j* = /S3256 or blank

   = Nonincendive equipment, FM approved for installation in Class I, Division 2

2. The installation must be in accordance with the National Electrical Code, ANSI/NFPA 70. Specific requirements for the installation of PLTC rated and ITC rated cable may be found in Article 501, Article 725 and Article 727.
3. *lokfast* guards on quick-disconnects require a tool to disconnect, rendering the connection not normally arcing.
4. The molded construction of the cordset and the gas/vaportight continuous sheath of the cable meet the requirements of the NEC, Article 501, for cable seals in Division 2.

TURCK 3000 Campus Drive Minneapolis, MN 55441-2656	Drawing No. QCF-00147		Rev J
	Scale None	Sheet 11 of 54	

Class 1, Division 2, Group A,B,C,or D
Hazardous Location

Nonhazardous Location

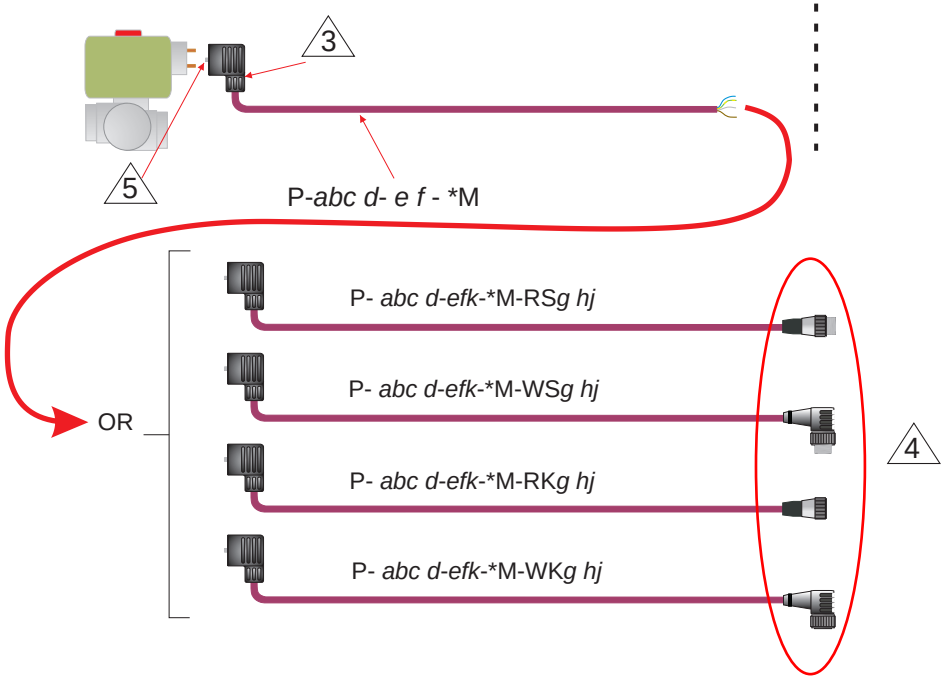

Notes:

1. Key:
   - a = Cable exit orientation T or V
   - b = DIN 43650 Type A, B, I, C8 or C9
   - c = Body color G, S or Y
   - d = Pinout 2, 21, 22, 3, 31,or 41
   - e = Wiring Code A, B, C, D, E, F, L, M, N, P, R
     (A, B, C, D, E, F for use with DIN Type A, B or I;
     A, L, M, N, P, R for use with DIN Type C8 or C9)
   - *f* = 3 or 4-digit ITC or PLTC cable number
   - *g* = Coupling nut material M or V
   - *h* = Number of conductors 2, 3, 4, 5, or 6
   - *j* = Connection code 0, 1, 2, 3, . . . 99
   - *k* = H or blank

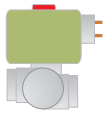

= Nonincendive equipment, FM approved for installation in Class I, Division 2; with an integral connector per DIN 43650, Type A (18 mm contact spacing), Type B (10 mm contact spacing), Type I (11 mm contact spacing), Type C8 (8 mm contact spacing) or Type C9 (9.4 mm contact spacing).

2. The installation must be in accordance with the National Electrical Code (NEC), ANSI/NFPA 70. Specific requirements for the installation of PLTC rated and ITC rated cable may be found in Article 501, Article 725 and Article 727.

3. The molded DIN 43650 valve plug does not meet the requirements of the NEC, Article 501, for cable seals in Class I, Division 2. Therefore, when the installation the installation requires cable sealing, single-ended DIN 43650 cordsets must be entirely installed in Division 2 - e.g, the cable must not cross the boundary to an unclassified location and the cable must be terminated in a manner in accordance with the NEC..

4. The construction of the *minifast* molded connector end and the gas/vaportight continuous sheath of the cable meet the requirements of the NEC, Article 501, for cable seals in Class I, Division 2.

5. The fastening screw requires a tool to disconnect, rendering the connection not normally arcing. The fastening screw must be engaged at all times when the circuit is live.

6. The wiring codes indicate the following pin-outs:

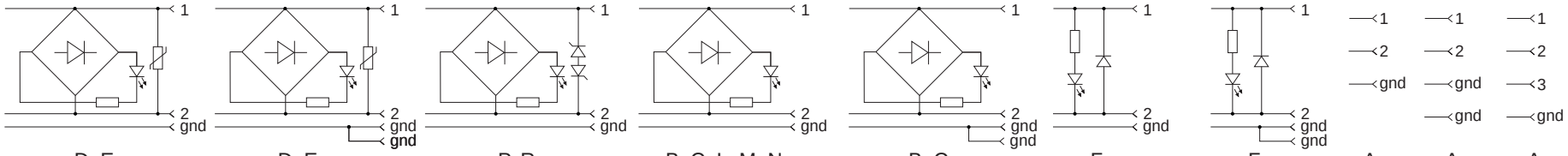

Wiring Code:	D, E (in DIN types B and I)	D, E (in DIN type A)	P, R	B, C, L, M, N (in DIN types B, C and I)	B, C (in DIN type A)	F (in DIN types B and I)	F (in DIN type A)	A	A	A

TURCK 3000 Campus Drive Minneapolis, MN 55441-2656	Drawing No. QCF-00147		Rev J
	Scale None	Sheet 12 of 54	

Class I, Division 2, Group A,B,C, or D Hazardous Location

Nonhazardous Location

Additional port number/type description groups when all ports are not identical

P- *a* - *b* *cdefg* *cdefg* cdefg *cdefg* - *h* - *j* *M* - *klmnq*

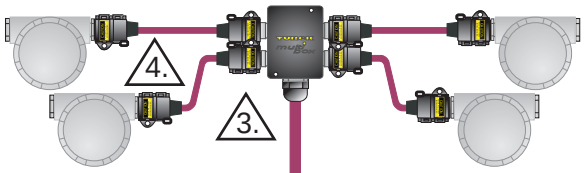

Additional port number/type description groups when all ports are not identical

P- *a* - *b* *cdefg* *cdefg* cdefg *cdefg* - *h* - *j* *M* - *klmnq*

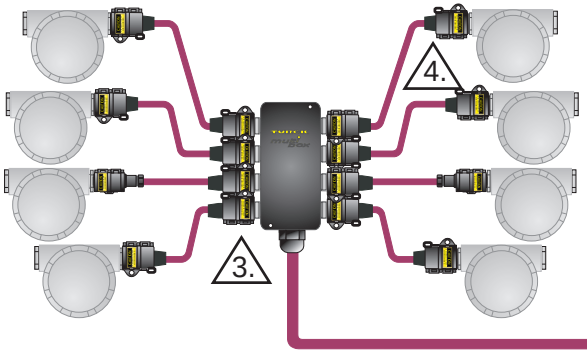

P-CKFL*e mn* - *j*/*p*
P-CKFD*e* mn - *j*/*p*
P-CSFL*e* mn - *j*/*p*
P-CSFD*e mn* - *j*/*p*

5.

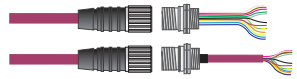

or

P-CKFL*e mn* - *h* - *j*/p
P-CKFD*e mn* - *h* - *j*/p
P-CSFL*e mn* - *h* - *j*/p
P-CSFD*e mn* - *h* - *j*/p

or

5.

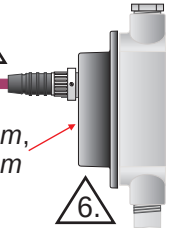

CA-1/CK *m*, CA-1/CKV *m*,
CA-1/CS *m*, CA-1/CSV *m*

6.

a = Housing material: SS or blank
b = Total number of ports: 3, 4, 5, 6, 7 or 8
c = Number of a given type if all ports are not identical: -1, -2, -3, -4, -5, -6, -7 or blank
d = Port connector type: RSF, or RKF
e = Port connector material: V or blank
f = Number of port conductors: 2, 3, 4, 5 or 6
g = 0, 1, 2, 3, . . . 9, 01, 02, 03, . . . 99
h = 3 or 4-digit ITC or PLTC cable number
j = Cable length in meters
k = Molded home-run connector type: CSM, CSWM, CKM, CKWM, CSSM or blank

l = Home-run connector material/locking: L, T, V or blank
m = Number of home-run connector conductors: 12 or 19
n = Wiring option: 1, 2, 3, . . . 9, 01, 02, 03, . . . 99
p = Option S613 or blank
q = Armor option: A or blank

Notes:

1. Field circuits may be installed using any of the combinations of equipment shown on sheets 16 and 17.
2. The installation must be in accordance with the National Electrical Code, ANSI/NFPA 70. Specific requirements for the installation of PLTC rated and ITC rated cable may be found in Article 501, and Articles 725 and 727.
3. The potted-in construction of the integral home-run cable and the gas/vaportight continuous sheath of the cable meet the requirements of the NEC, Article 501, for cable seals in Class I, Division 2.
4. *lokfast* guards on quick-disconnects require a tool to disconnect, rendering the connection not normally arcing.
5. When *k* = CSM..., CKM..., CSSM..., or CXM..., a connector is molded to the end of the home-run cable. When connection is made to a fixed receptacle in the hazardous location, the molded connector must have *l* = L or T indicating a locking coupling nut. When the connection is made in the nonhazardous location, locking type coupling nuts are not required (*l* = L, T, V or blank).
6. See Sheet 19 for installation of CA-... conduit body adaptors.

Class I, Division 2, Group A,B,C, or D Hazardous Location

Nonhazardous Location

a = Housing material: SS or blank
b = Total number of ports: 3, 4, 5, 6, 7 or 8
c = Number of a given type if all ports are not identical: -1, -2, -3, -4, -5, -6, -7 or blank
d = Port connector type: RSF, or RKF
e = Material: V or blank
f = # of port cond.: 2, 3, 4, 5 or 6 or blank
g = Wiring option: 0, 1, 2, 3, . . . 99 or blank
h = Number of home-run conductors: 12 or 19
j = Wiring option: 1, 2, 3, . . . 9, 01, 02, 03, . . . 99 or blank
k = 3 or 4-digit ITC or PLTC cable number
m = Cable or lead length in meters
n = A or blank *p* = L or T
q = L, T, V or blank *r* = /S613 or blank

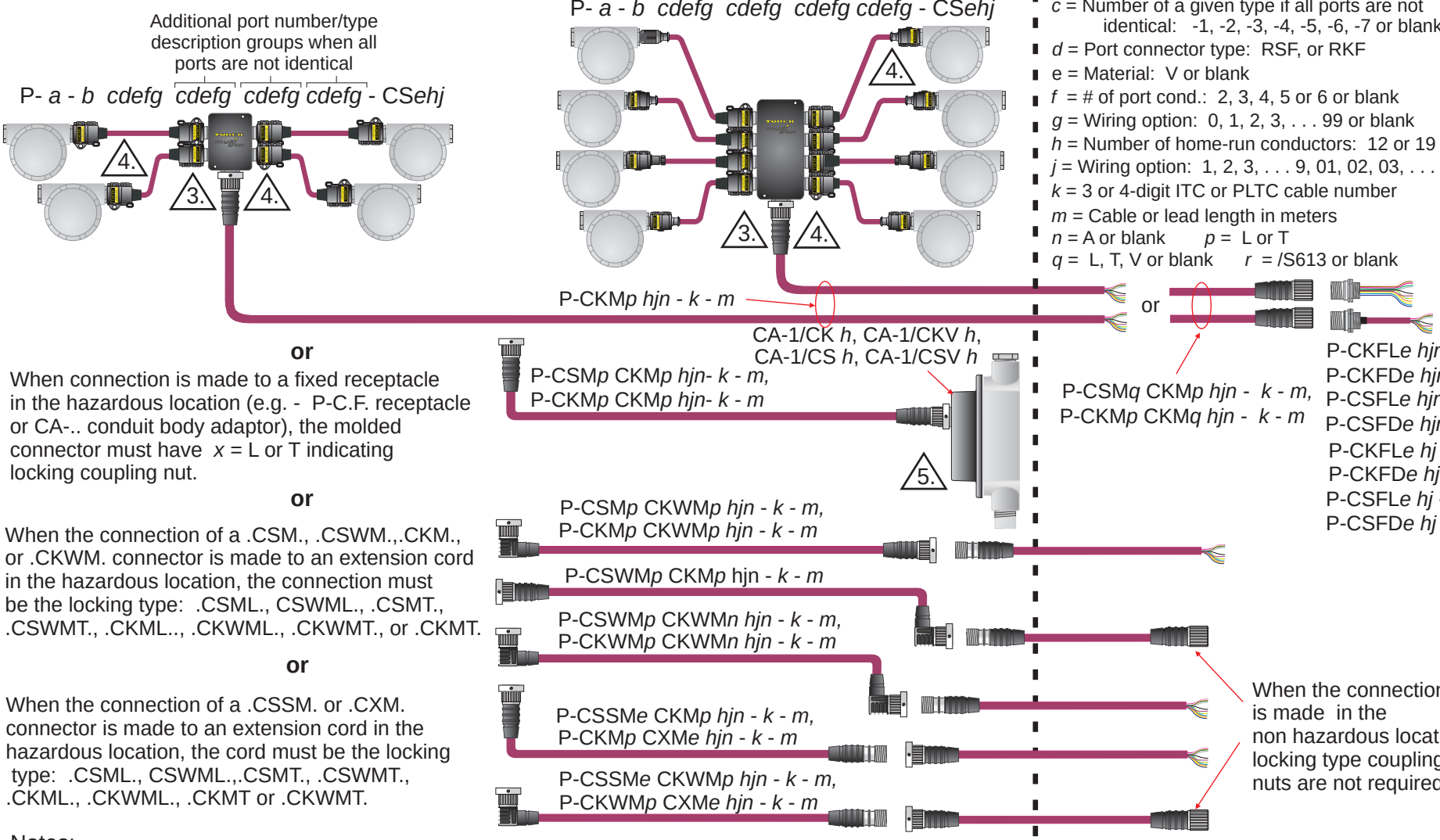

or

When connection is made to a fixed receptacle in the hazardous location (e.g. - P-C.F. receptacle or CA-.. conduit body adaptor), the molded connector must have *x* = L or T indicating locking coupling nut.

or

When the connection of a .CSM., .CSWM.,.CKM., or .CKWM. connector is made to an extension cord in the hazardous location, the connection must be the locking type: .CSML., CSWML., .CSMT., .CSWMT., .CKML.., .CKWML., .CKWMT., or .CKMT.

or

When the connection of a .CSSM. or .CXM. connector is made to an extension cord in the hazardous location, the cord must be the locking type: .CSML., CSWML.,.CSMT., .CSWMT., .CKML., .CKWML., .CKMT or .CKWMT.

Notes:

1. Field circuits may be installed using any of the combinations of equipment shown on sheets 16 and 17.
2. The installation must be in accordance with the National Electrical Code, ANSI/NFPA 70. Specific requirements for the installation of PLTC rated or ITC rated cable may be found in Article 501, and Articles 725 and 727.

3. The molded construction of the home-run cable and the gas/vaportight continuous sheath of the cable meet the requirements of the NEC, Article 501 for cable seals in Class I, Division 2. P-CKM... home-run connectors must either be securely connected to the junction box or plugged using a Turck CS-CC closure cap.

4. *lokfast* guards or set-screw construction on quick-disconnects require a tool to disconnect, rendering the connection not normally arcing.

5. See Sheet 19 for installation of CA-... conduit body adaptors.

Class I, Division 2, Group A,B,C, or D Hazardous Location

Nonhazardous Location

Additional port number/type description groups when all ports are not identical

P- *a* - *b* *cdefg* *cdefg* cdefg *cdefg* - *h* - *j* M - *kelm*

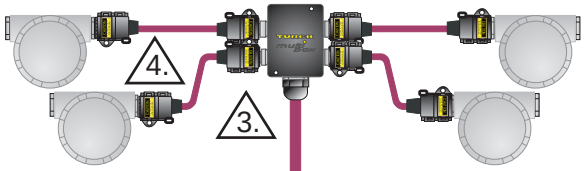

Additional port number/type description groups when all ports are not identical

P- *a* - *b* *cdefg* cdefg *cdefg* *cdefg* - *h* - *j* M - *kelm*

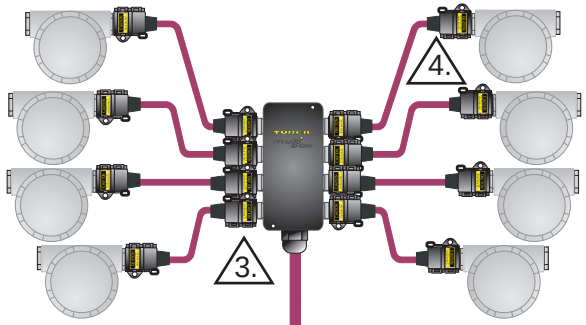

a = Housing material: SS or blank
b = Total number of ports: 3, 4, 5, 6, 7 or 8
c = Number of a given type if all ports are not identical: -1, -2, -3, -4, -5, -6, -7 or blank
d = Port connector type: RSF, or RKF
e = Port connector material: V or blank
f = Number of port conductors: 2, 3, 4, 5 or 6
g = Wiring option: 0, 1, 2, 3, 4, . . . 99 or blank

h = 3 or 4-digit ITC or PLTC cable number
j = Cable length in meters
k = Molded home-run connector type: RS, WS, RK, WK or blank
l = Number of home-run connector conductors: 7, 8, 9, 10, 12 or 19
m = Wiring option: 0, 1, 2, 3, 4, 5, 6, 7, 8, 9, 01, 02, 03, . . . 99

Notes:

1. Field circuits may be installed using any of the combinations of equipment shown on sheets 17 and 18.
2. The installation must be in accordance with the National Electrical Code, ANSI/NFPA 70. Specific requirements for the installation of PLTC rated or ITC rated cable may be found in Article 501, and Articles 725 and 727.
3. The potted-in construction of the integral home-run cable and the gas/vaportight continuous sheath of the cable meet the requirements of the NEC, Article 501, for cable seals in Class I, Division 2.
4. *lokfast* guards or set-screw construction on quick-disconnects require a tool to disconnect, rendering the connection not normally arcing.
5. When *k* = RS, WS, RK or WK, a *minifast* B- or C-size connector is molded to the end of the home-run cable per Turck control drawing Ni-2.407.

Class I, Division 2, Group A,B,C, or D Hazardous Location

Nonhazardous Location

Additional port number/type description groups when all ports are not identical

P- *a* - *b* *cdefg* *cdefg* *cdefg* *cdefg* - RSF*ehj*

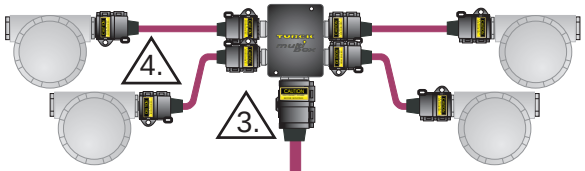

Additional port number/type description groups when all ports are not identical

P- *a* - *b* *cdefg* *cdefg* *cdefg* *cdefg* - RSF*ehj*

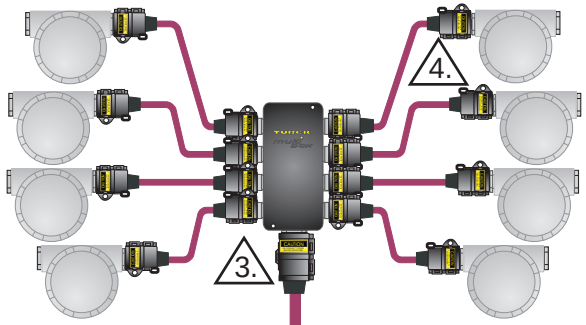

P- RK *ehg* - *k* - *m* M 5. P- RS *ehg* RK *ehg* - *k* - *m* M

a = Housing material: SS or blank
b = Total number of ports: 3, 4, 5, 6, 7 or 8
c = Number of a given type if all ports are not identical: -1, -2, -3, -4, -5, -6, -7 or blank
d = Port connector type: RSF, or RKF
e = Port connector material: V or blank
f = Number of port conductors: 2, 3, 4, 5 or 6
g = Wiring option: 0, 1, 2, 3, 4, . . . 99 or blank

h = Number of home-run conductors: 7, 8, 9, 10, 12 or 19
j = Wiring option: 1, 2, 3, . . . 9, 01, 02, 03, . . . 99 or blank
k = 3 or 4-digit ITC or PLTC cable number
m = Cable length in meters

Notes:

1. Field circuits may be installed using any of the combinations of equipment shown on sheets 17 and 18.
2. The installation must be in accordance with the National Electrical Code, ANSI/NFPA 70. Specific requirements for the installation of PLTC rated or ITC rated cable may be found in Article 501, and Articles 725 and 727.

3. The molded construction of the home-run cable and the gas/vaportight continuous sheath of the cable meet the requirements of the NEC, Article 501 for cable seals in Class I, Division 2. P-CKM... home-run connectors must either be securely connected to the junction box or plugged using a Turck CS-CC closure cap.

4. *lokfast* guards or set-screw construction on quick-disconnects require a tool to disconnect, rendering the connection not normally arcing.

5. Home-run cables may be installed per Turck control drawing Ni-2.407.

TURCK 3000 Campus Drive Minneapolis, MN 55441-2656	Drawing No. QCF-00147		Rev J
	Scale None	Sheet 16 of 54	

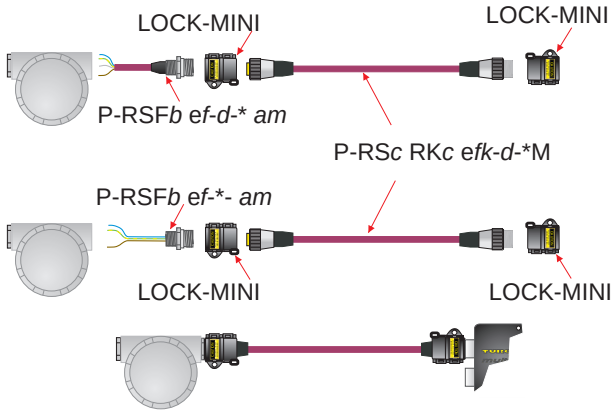

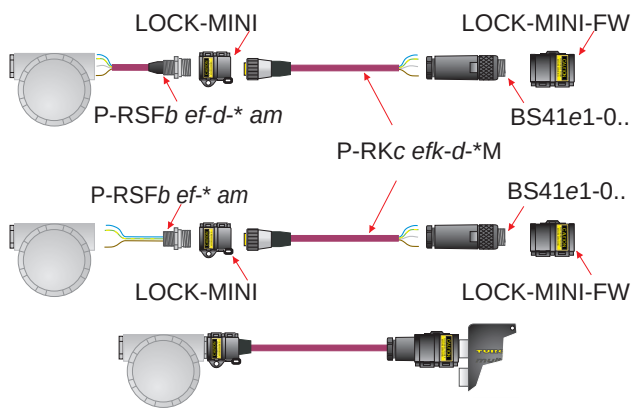

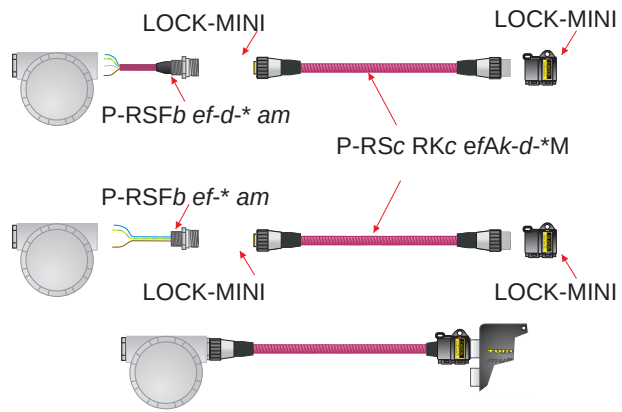

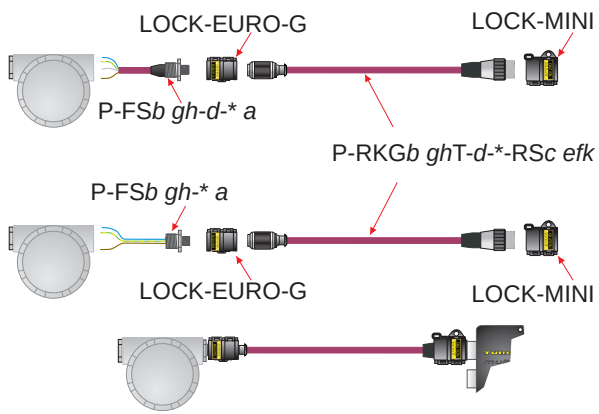

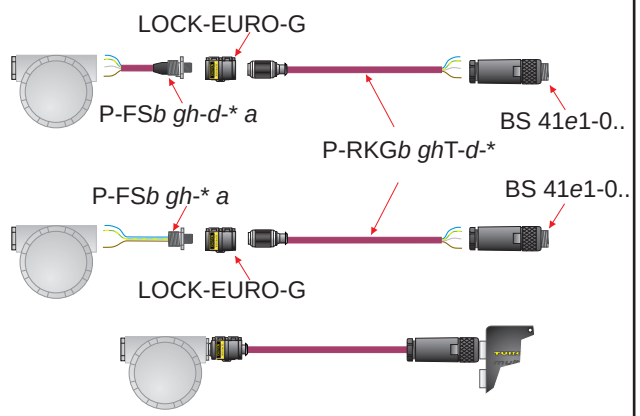

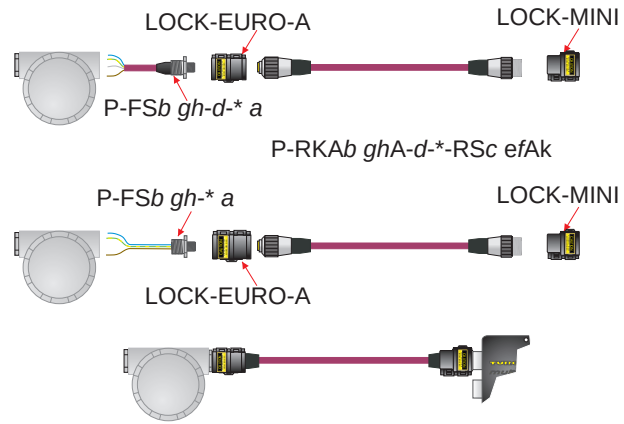

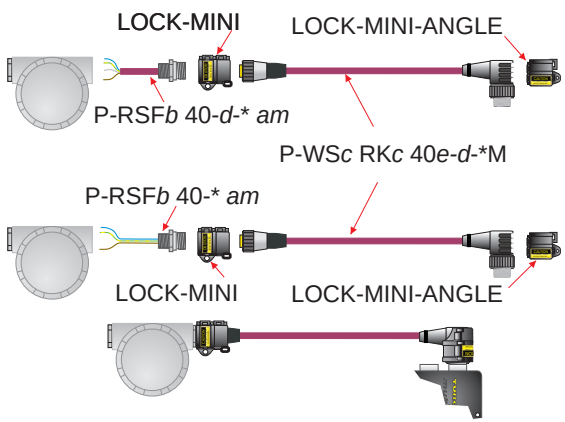

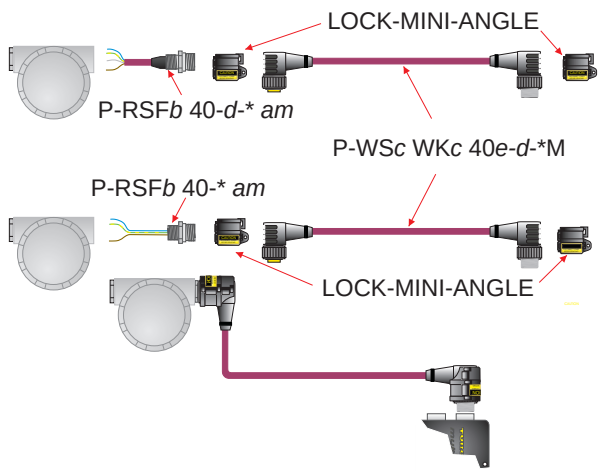

KEY

a = /14.5/NPT, /14.75/NPT, /M20, or blank
b = V or blank
c = M or V
d = 3 or 4-digit ITC or PLTC cable number
e = 2, 3, 4, 5, or 6
f = 0, 1, 2, 3, . . . 9, 01, 02, 03, . . . 99
g = 4 or 5
h = .1, .2, .3, ...99, or blank
k = H or blank
m = /S3256 or blank

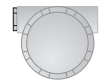

= Nonincendive equipment, FM approved for installation in Class I, Division 2

= Turck multibox with *minifast* port connectors, part numbers identified on Sheets 9-12.

TURCK 3000 Campus Drive Minneapolis, MN 55441-2656	Drawing No. QCF-00147		Rev J
	Scale None	Sheet 17 of 54	

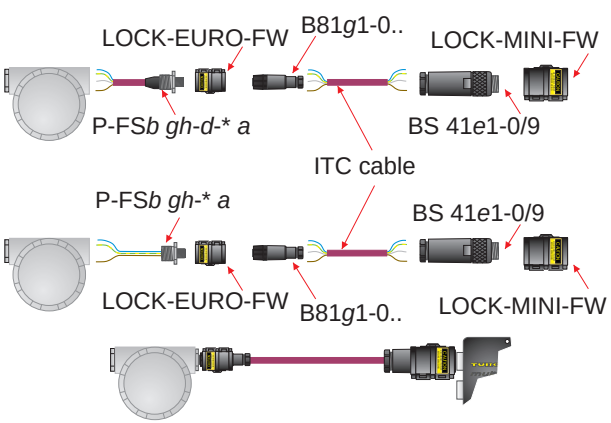

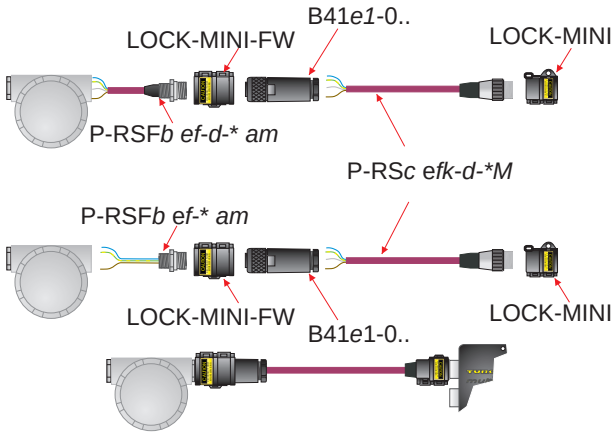

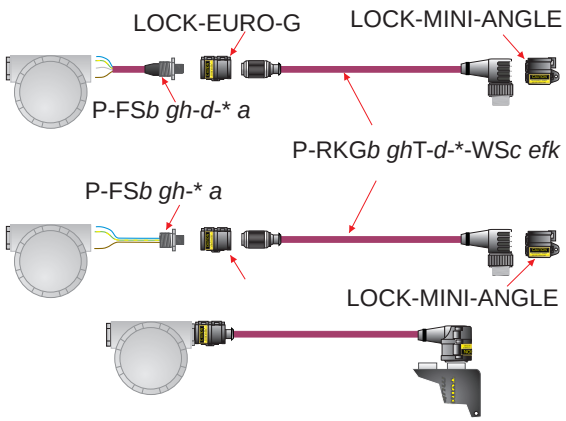

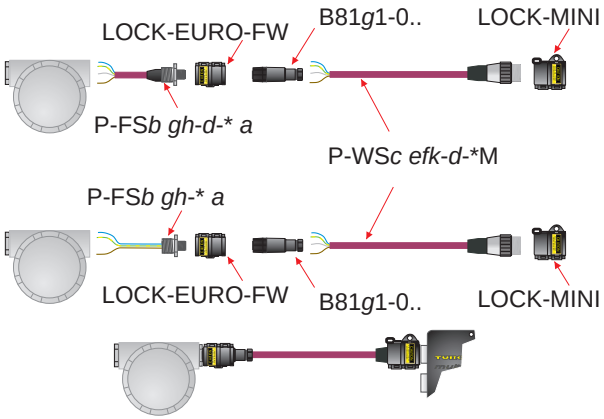

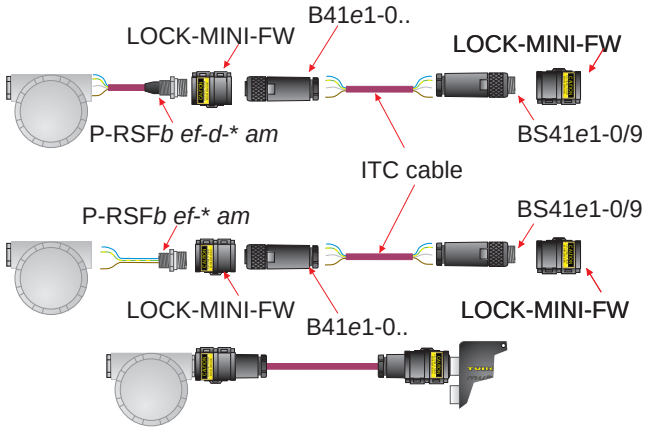

KEY

a = /14.5/NPT, /14.75/NPT, /M20, or blank

b = V or blank

c = M or V

d = 3 or 4-digit ITC or PLTC cable number

e = 2, 3, 4, 5, or 6

f = 0, 1, 2, 3, . . . 99

g = 4 or 5

h = .1, .2, .3, ...99, or blank

k = H or blank

m = /S3256 or blank

= Nonincendive equipment, FM approved for installation in Class I, Division 2

= Turck multibox with *minifast* port connectors, part numbers identified on Sheets 9-12.

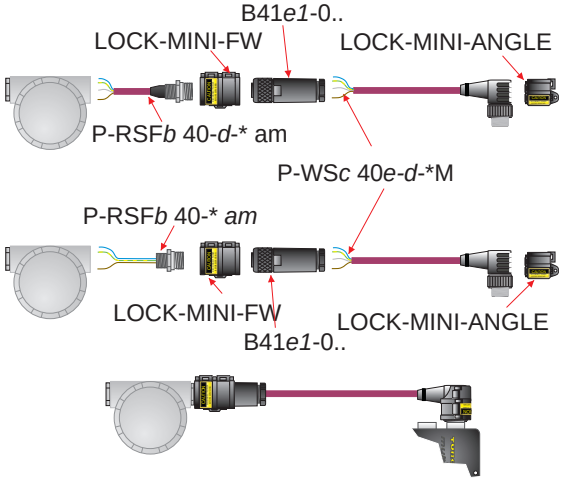

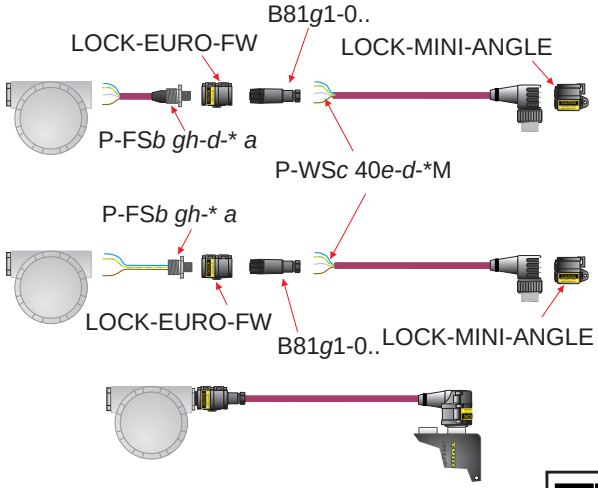

TURCK 3000 Campus Drive Minneapolis, MN 55441-2656	Drawing No. QCF-00147		Rev J
	Scale None	Sheet 18 of 54	

Class 1, Division 2, Group A,B,C,or D
Hazardous Location

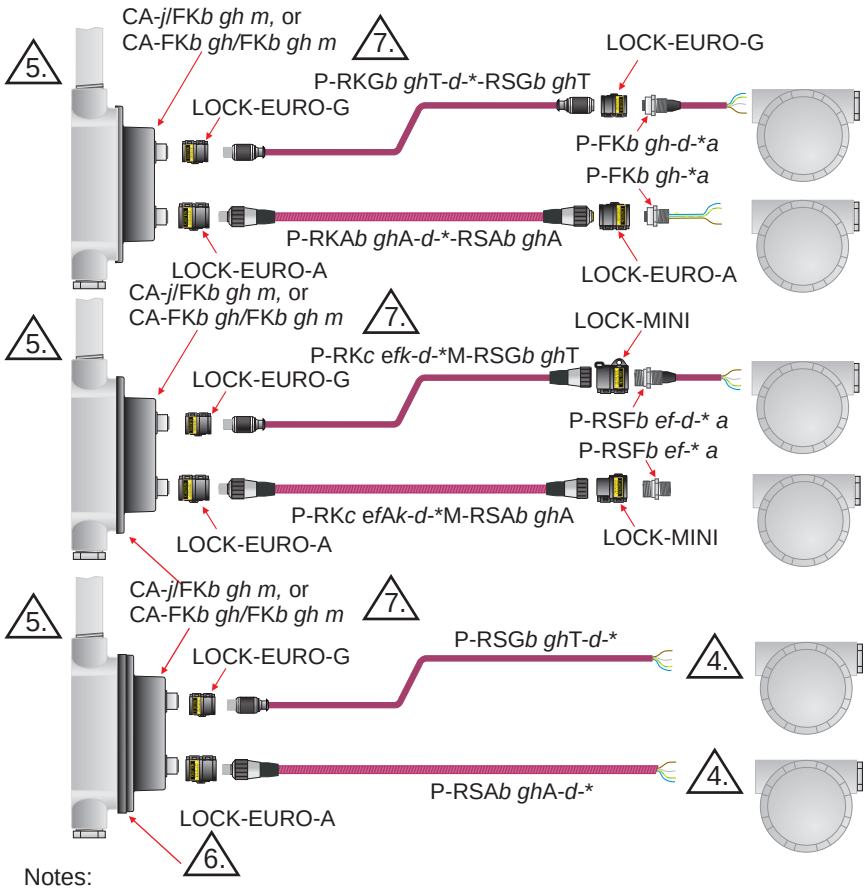

Class 1, Division 2, Group A,B,C,or D
Hazardous Location

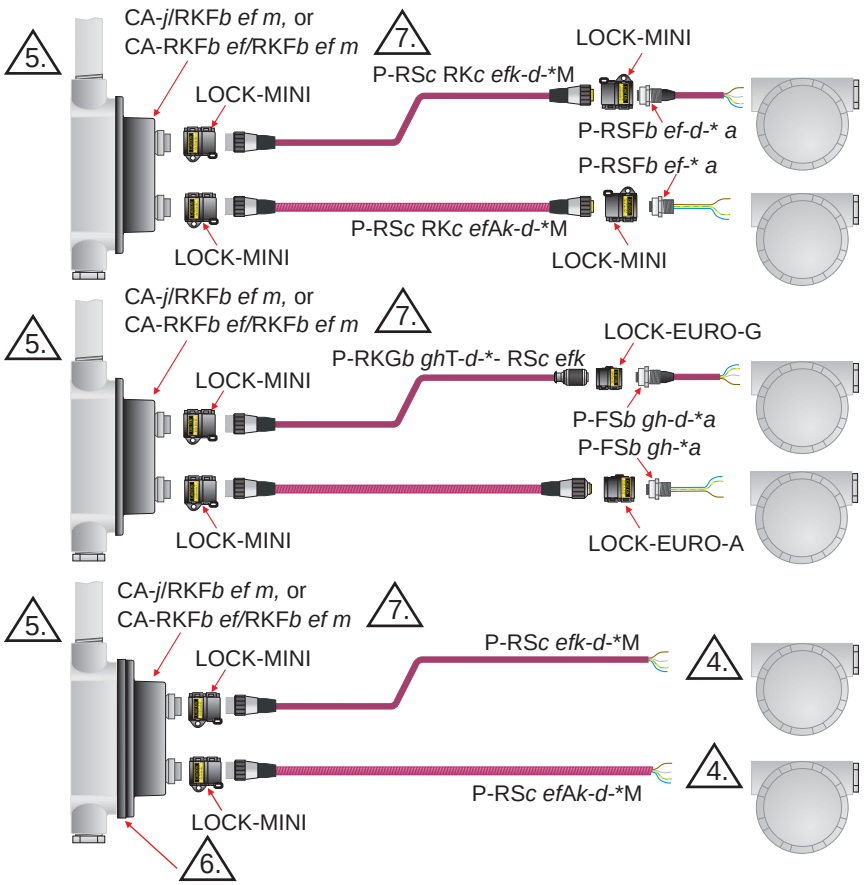

Notes:

1. Key: *a* = /14.5/NPT or /14.75/NPT *b* = V or blank *c* = M or V *d* = 3 or 4-digit ITC or PLTC cable number *e* = 2, 3, 4, 5, or 6 *f* = 0, 1, 2, 3, . . . 9, 01, 02, 03, . . . 99
g = 4 or 5 *h* = .1, .2, .3, . . .99, or blank *j* = 1 or 2 *k* = H or blank *m* = /S651, /S3077 or blank

= Nonincendive equipment, FM approved for installation in Class I, Division 2

= Conduit body, NRTL approved, suitable for installation in Class I, Division 2. See sheet 20 for conduit body cover interface dimensions or consult factory for a list of recommended suitable conduit bodies.

2. The installation must be in accordance with the National Electrical Code (NEC), ANSI/NFPA 70. Specific requirements for the installation of PLTC rated and ITC rated cable may be found in Article 501, Article 725 and Article 727.

3. *lokfast* guards on quick-disconnects require a tool to disconnect, rendering the connection not normally arcing.

4. Single-ended cordsets must enter the nonincendive equipment using a method suitable for interfacing PLTC or ITC cable with the entry type of the equipment.

5. The conduit body must be installed in accordance with the NEC and the manufacturer's instructions.

6. Adaptor plate A9534 may be used to adapt the CA-xxx to Form 7 conduit bodies (bodies designed for use with wedge nut covers). This is indicated by option code S3077 when supplied with the CA-... adaptor.

7. Models with two female ports of the same type are shown. Single-port models (*j* =1), models with two male ports (e.g. CA-2RSFV 40 or CA-RSFV 40/RSFV 50), mixed gender models (e.g. CA-RSFV/RKFV 40), and/or mixed type models (e.g. CA-RSV 40/FKV 4.5) are also possible.

TURCK 3000 Campus Drive Minneapolis, MN 55441-2656	Drawing No. QCF-00147		Rev J
	Scale None	Sheet 19 of 54	

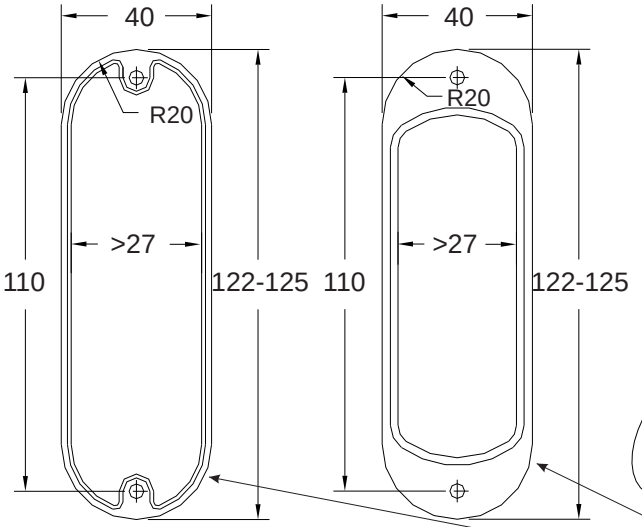

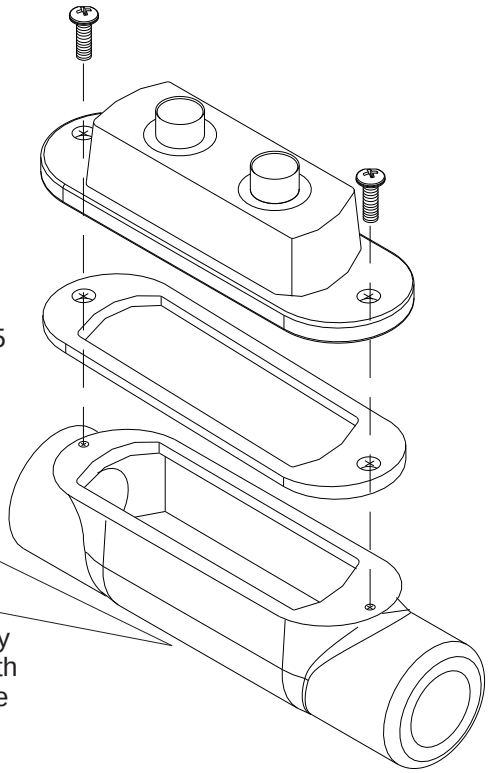

CA-.... installs directly on conduit bodies with these cover interface dimensions.

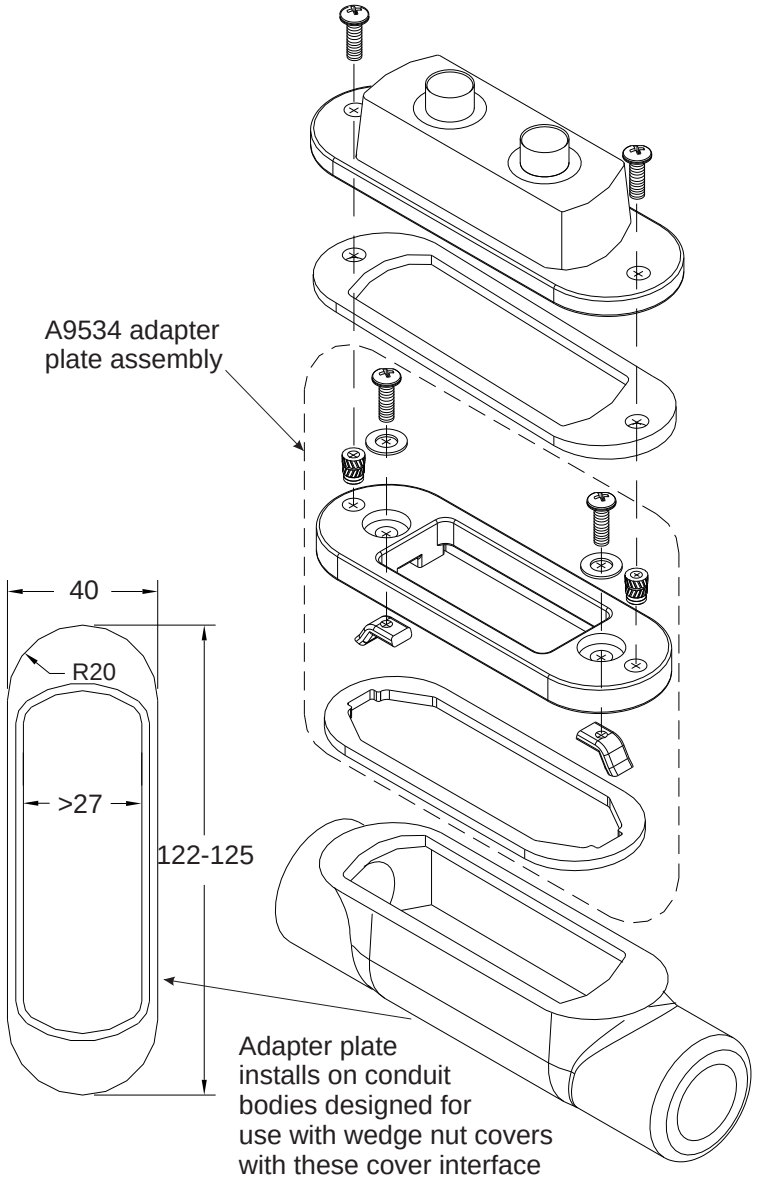

Adapter plate installs on conduit bodies designed for use with wedge nut covers with these cover interface dimensions.

Examples of compatible conduit bodies for direct mounting of CA-... adaptors are 3/4” NPT size of Crouse-Hinds Form 8, Mark 9, and Appleton FM8. Examples of compatible conduit bodies for mounting with A9534 adaptor plates are 3/4” NPT size of Crouse-Hinds Form 7, Appleton FM7, and Killark Duralloy 7.

TURCK 3000 Campus Drive Minneapolis, MN 55441-2656	Drawing No. QCF-00147		Rev J
	Scale None	Sheet 20 of 54	

Class 1, Division 2, Group A,B,C,or D
Hazardous Location

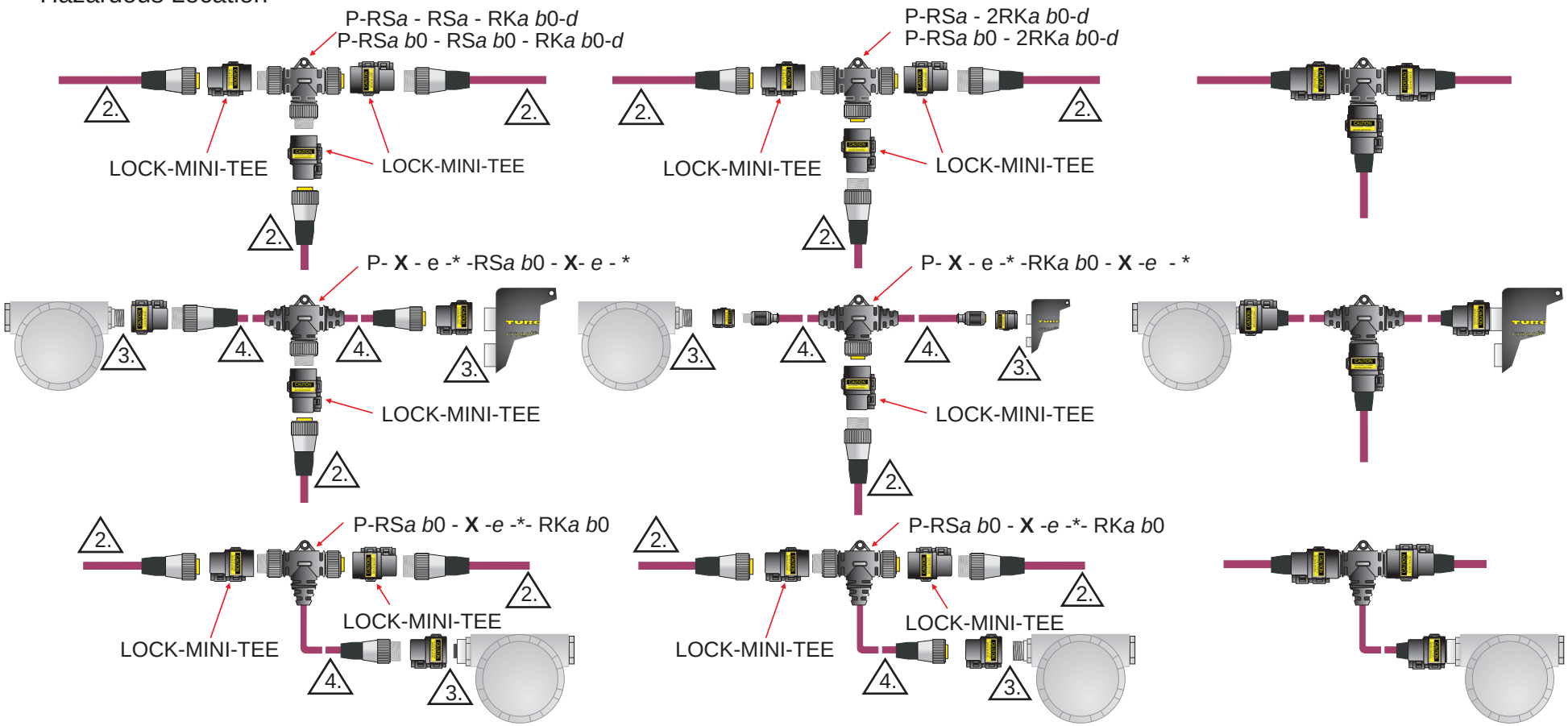

Notes:

1. Key: a = M or V b = 2, 3, 4, 5, or 6 c = 0, 1, 2, 3, . . . 9, 01, 02, 03, . . . 99 d = KF, KM, or blank *e* = 3 or 4-digit ITC or PLTC cable number
   f = V or blank *g* = 4 or 5 *h* = .1, .2, .3, . . .99, or blank

2. Turck *minifast* Tees may be used in circuit with Turck *minifast* cordsets identified on Sheet 10 when installed as shown above.

3. The cord connectors of Tees with integrally molded cords must be connected only to fixed receptacles. These may be either approved Turck receptacles installed in field devices, or the receptacles of FM approved Turck junctions. lokfast guards must be installed per the requirements of Sheet 2 for *eurofast* connectors and Sheet 10 for *minifast* connectors.

4. The integrally molded cords may have any of the following connector types:

male *minifast*	female *minifast*	male *minifast* RA	female *minifast* RA	male G-type *eurofast*	female G-type *eurofast*
X = RS*a bc*	**X** = RK*a bc*	**X** = WS*a bc*	**X** = WK*a bc*	**X** = RSG*f gh*	**X** = RKG*f gh*

5. The installation must be in accordance with the National Electrical Code (NEC), ANSI/NFPA 70. Specific requirements for the installation of PLTC rated and ITC rated cable may be found in Article 501, Article 725 and Article 727.

6. *lokfast* guards on quick-disconnects require a tool to disconnect, rendering the connection not normally arcing.

TURCK 3000 Campus Drive Minneapolis, MN 55441-2656	Drawing No. QCF-00147		Rev J
	Scale None	Sheet 21 of 54	

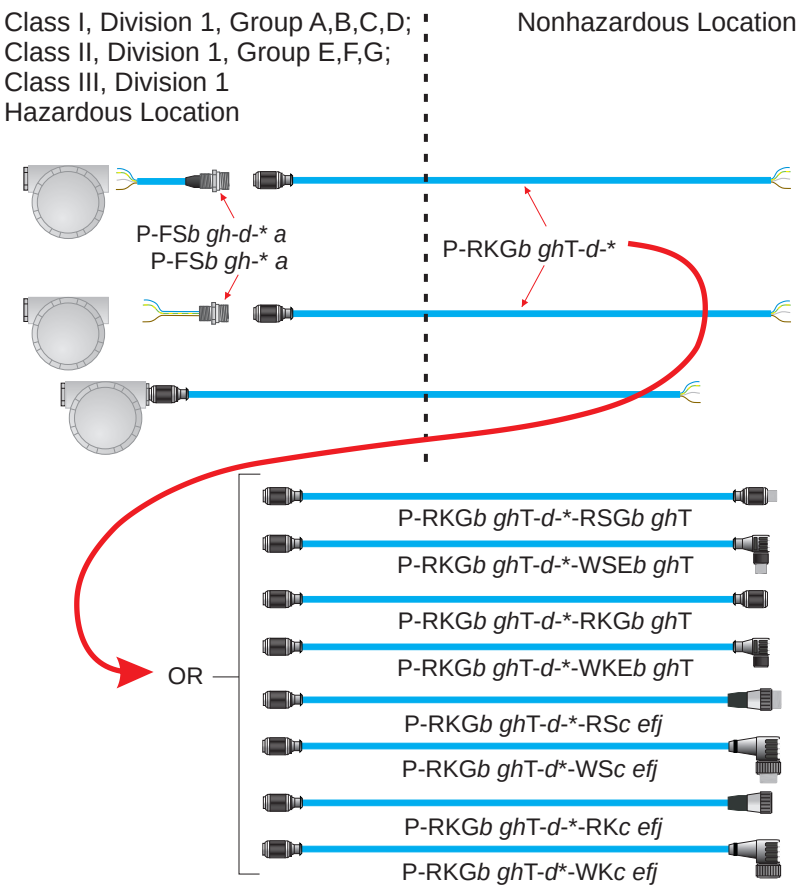

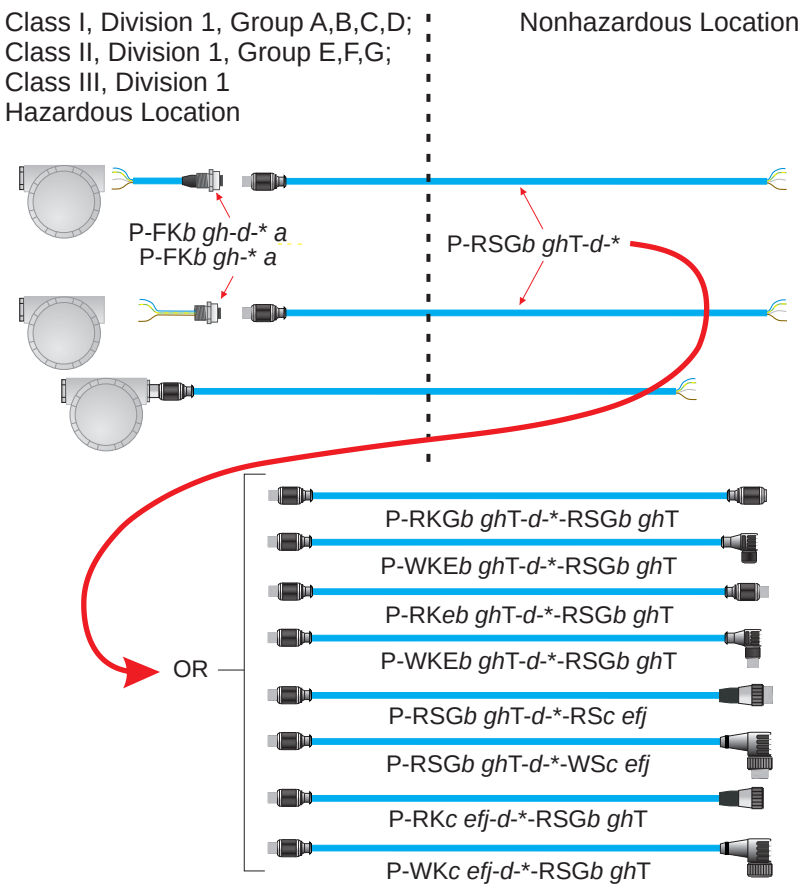

Notes:

1. Key: *a* = /14.5/NPT, /14.75/NPT, /M20, or blank *b* = V or blank *c* = M or V *d* = 3 or 4-digit ITC or PLTC cable number
e = 2, 3, 4, 5, or 6 *f* = 0, 1, 2, 3, . . . 9, 01, 02, 03, . . . 99 *g* = 4 or 5 *h* = .1, .2, .3, ...99, or blank *j* = H or blank

= Intrinsically Safe Apparatus, FM approved for Class I, Division 1

2. The installation must be in accordance with the National Electrical Code (NEC), ANSI/NFPA 70. Specific requirements for the installation of PLTC rated and ITC rated cable may be found in Article 501, Article 725 and Article 727.

3. The molded construction of the home-run cable and the gas/vaportight continuous sheath of the cable meet the requirements of the NEC, Article 501 for cable seals in Class I, Divisions 1 and 2.

TURCK 3000 Campus Drive Minneapolis, MN 55441-2656	Drawing No. QCF-00147		Rev J
	Scale None	Sheet 22 of 54	

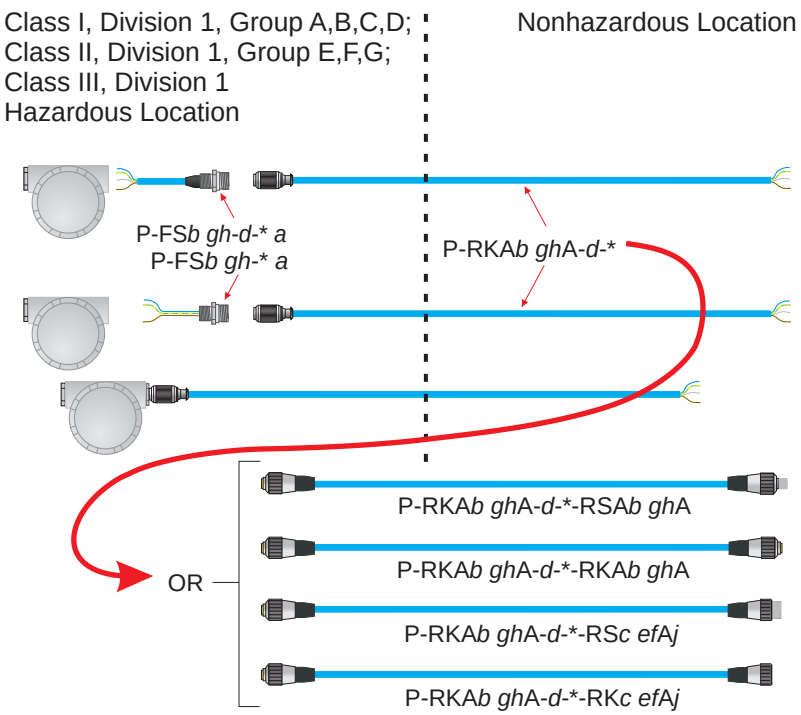

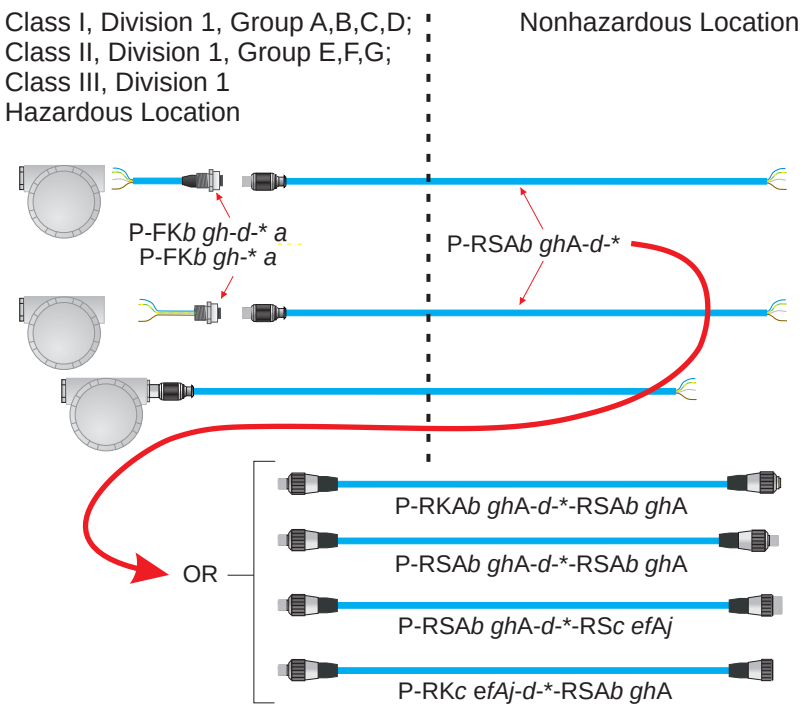

Notes:

1. Key: *a* = /14.5/NPT, /14.75/NPT, /M20, or blank *b* = V or blank *c* = M or V *d* = cable type (3-or 4-digit number)
   e = 2, 3, 4, 5, or 6 *f* = 0, 1, 2, 3, . . . 9, 01, 02, 03, . . . 99 *g* = 4 or 5 *h* = .1, .2, .3, ...99, or blank *j* = H or blank

= Intrinsically Safe Apparatus, FM approved for Class I, Division 1

2. The installation must be in accordance with the National Electrical Code (NEC), ANSI/NFPA 70. Specific requirements for the installation of PLTC rated and ITC rated cable may be found in Article 501, Article 725 and Article 727.

3. The molded construction of the home-run cable and the gas/vaportight continuous sheath of the cable meet the requirements of the NEC, Article 501, for cable seals in Class I, Divisions 1 and 2.

TURCK 3000 Campus Drive Minneapolis, MN 55441-2656	Drawing No. QCF-00147		Rev J
	Scale None	Sheet 23 of 54	

Class I, Division 1, Group A,B,C,D;
Class II, Division 1, Group E,F,G;
Class III, Division 1 Hazardous Location

Nonhazardous Location

a = Housing material: SS- or blank
b = Port connector material: V or blank
c = 3 or 4-digit ITC or PLTC cable number
d = Cable length in meters
e = Home-run connector material/locking: L, T, V or blank
f = Wiring option: 0, 1, 2, 3, . . . 9, 01, 02, 03, . . . 99 or blank
g = Armor option: A or blank
h = /S613 or blank

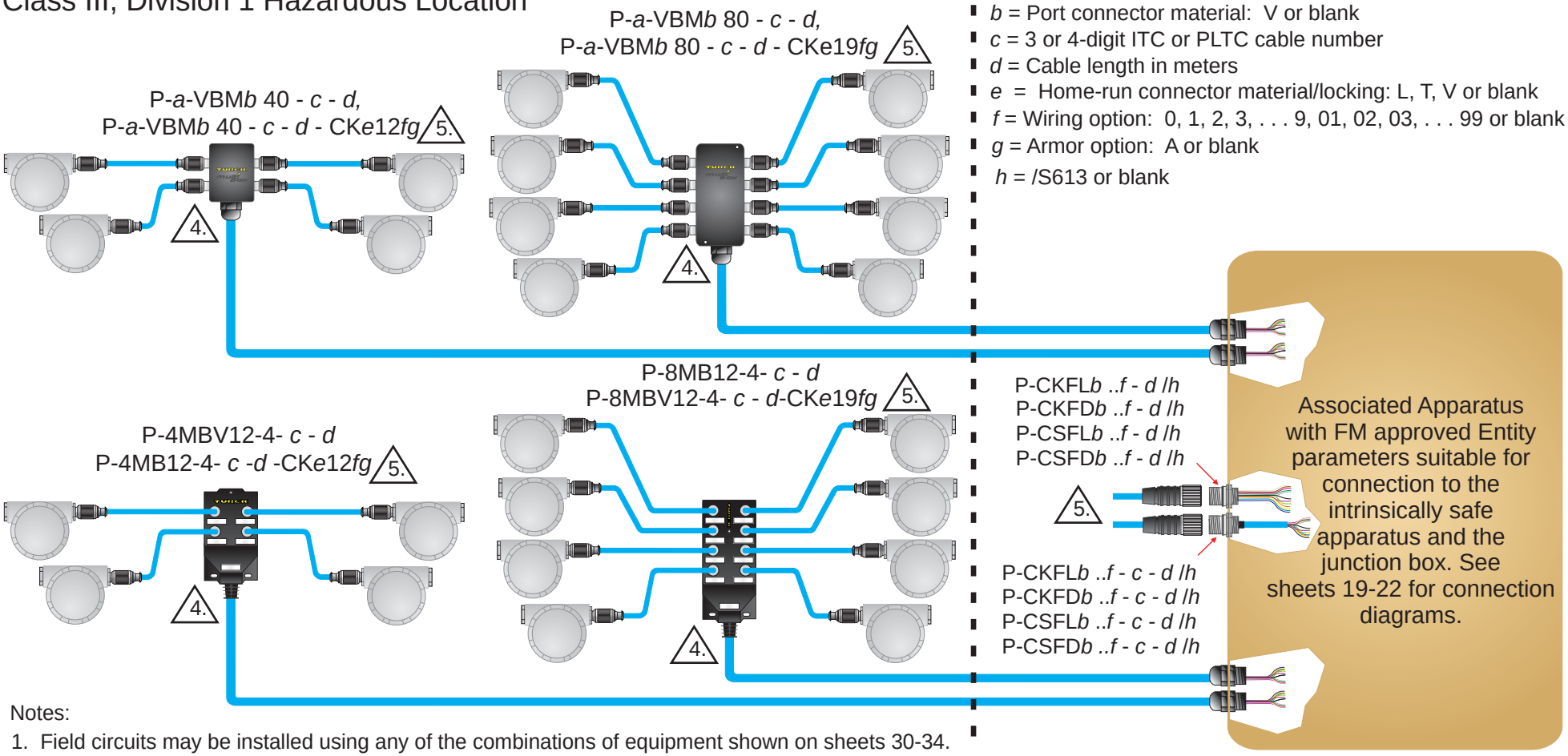

Notes:

1. Field circuits may be installed using any of the combinations of equipment shown on sheets 30-34.
2. The Entity Concept allows the interconnection of intrinsically safe apparatus and associated apparatus not specifically examined in combination as a system when the following conditions are met:

   $V_{max} \geq V_{oc}$ or V_t $\quad I_{max} \geq I_{sc}$ or I_t $\quad C_{i\,(total)} + C_{cable} \leq C_a$ $\quad L_{i\,(total)} + L_{cable} \leq L_a$

   Junction box Entity Parameters (per circuit):

   $V_{max} = 30V$ $\quad I_{max} = 600mA$ $\quad C_i = 0$ $\quad L_i = 0$
3. The installation must be in accordance with the National Electrical Code, ANSI/NFPA 70. Specific requirements for the installation of PLTC rated and ITC rated cable may be found in Article 501, Article 725 and Article 727.
4. The potted-in construction of the integral home-run cable and the gas/vaportight continuous sheath of the cable meets the requirements of the NEC, Article 501, cable seals in Class I, Divisions 1 and 2.
5. A Turck *multifast* connector may be molded to the end of the home-run cable.
6. WARNING: the P-.VBM.40 and P-.VBM.80 junction box enclosure contains aluminum and is considered to constitute a potential risk of ignition by impact or friction. Care must be taken into account during installation and use to prevent impact or friction.
7. Parts of the P-4MB.12-.. and P-8MB.12-... junction box exclosures are constructed from plastic. To prevent the risk of electrostatic sparking, the plastic should only be cleaned with a damp cloth.

TURCK 3000 Campus Drive Minneapolis, MN 55441-2656	Drawing No. QCF-00147	Rev J
	Scale None	Sheet 24 of 55

Class I, Division 1, Group A,B,C,D;
Class II, Division 1, Group E,F,G;
Class III, Division 1 Hazardous Location

Nonhazardous Location

a = Housing material: SS- or blank
b = Port connector material: V or blank
c = Wiring option: 0, 1, 2, 3, . . . 9, 01,02, 03, . . . 99 or blank
d = Armor: A or blank
e = 3 or 4-digit ITC or PLTC cable number
f = Cable length in meters
g = Home-run connector mat'l/locking: L, T, V or blank
h = /S613 or blank
j = Home-run connector: CS or RSF *k* = R or W
P-CKFL*g* ..*b*- *c* - *f* /*h*, P-CSFL*g* ..*b*- *c* - *f* /*h*,
P-CKFD*g* ..*b*- *c* - *f* /*h*, P-CSFD*g* ..*b*- *c* - *f* /*h*

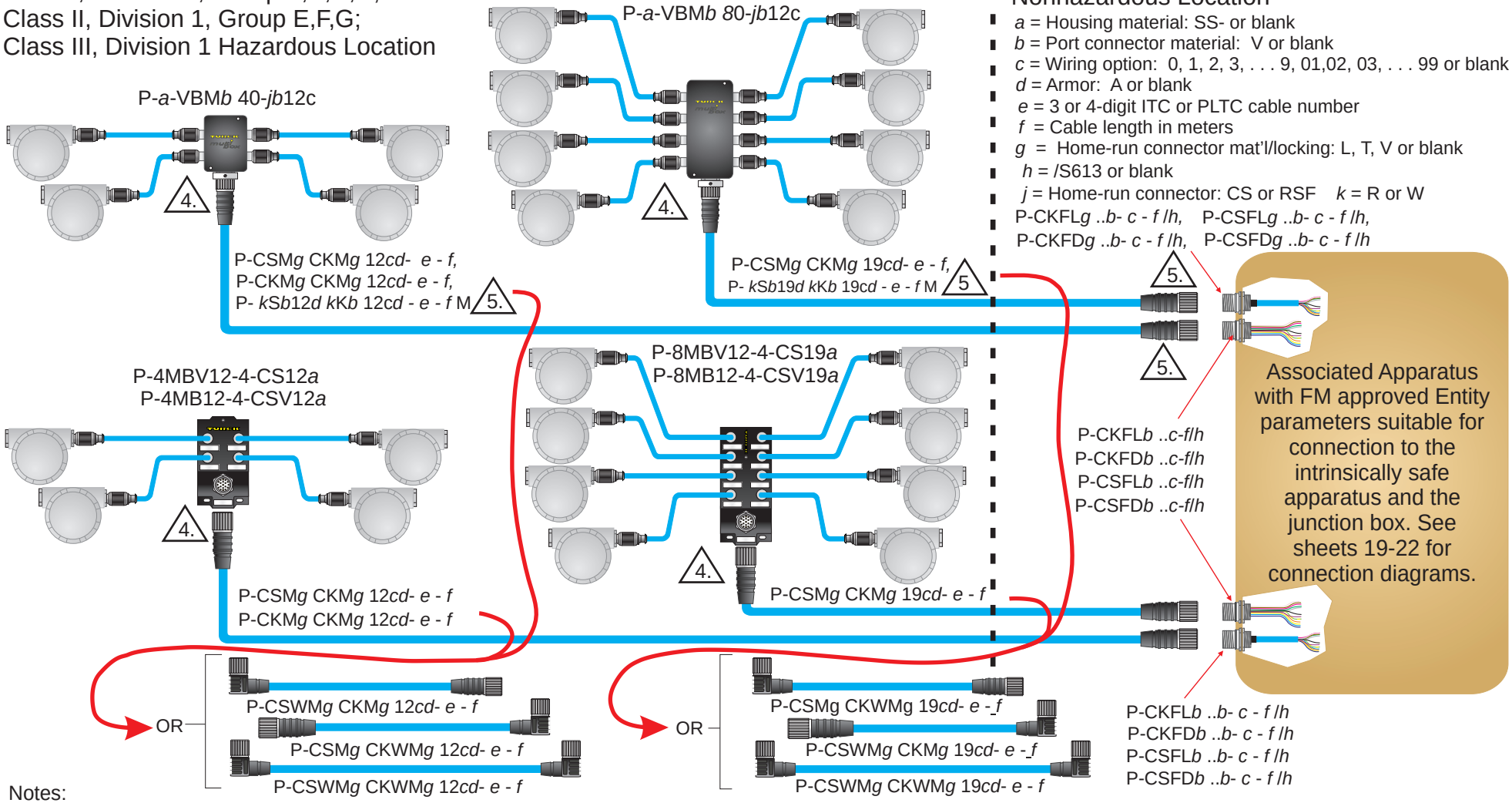

Notes:

1. Field circuits may be installed using any of the combinations of equipment shown on sheets 31-34.
2. The Entity Concept allows the interconnection of intrinsically safe apparatus and associated apparatus not specifically examined in as a system when the following conditions are met:
   $V_{max} \geq V_{oc}$ or V_t $I_{max} \geq I_{sc}$ or I_t $C_{i\,(total)} + C_{cable} \leq C_a$ $L_{i\,(total)} + L_{cable} \leq L_a$
   Junction box Entity Parameters (per circuit):
   $V_{max} = 30V$ $I_{max} = 600mA$ $C_i = 0$ $L_i = 0$
3. The installation must be in accordance with the National Electrical Code, ANSI/NFPA 70. Specific requirements for the installation of PLTC rated and ITC rated cable may be found in Article 501, Article 725 and Article 727.
4. The molded construction of the home-run cable and the gas/vaportight continuous sheath of the cable meets the requirements of the NEC, Article 501 for cable seals in Class I, Divisions 1 &2 P-CKM home-run connectors must either be securely connected to the junction box or plugged using a Turck CS-CC closure cap.
5. *multifast* home-run cordsets and receptacles are illustrated above. *minifast* home-run cordsets are used with junction with *j* = RSG and installed per Turck control drawing Ni-2.407.
6. WARNING: the P-.VBM.40 and P-.VBM.80 junction box enclosure contains aluminum and is considered to constitute a potential risk of ignition by impact or friction. Care must be taken into account during installation and use to prevent impact or friction.
7. Parts of the P-4MB.12-.. and P-8MB.12-... junction box exclosures are constructed from plastic. To prevent the risk of electrostatic sparking, the plastic should only be cleaned with a damp cloth.

TURCK 3000 Campus Drive Minneapolis, MN 55441-2656	Drawing No. QCF-00147		Rev J
	Scale None	Sheet 25 of 54	

P - 4MB 12 - 4 - . . . - *, P - 4MBV 12 - 4 - . . . - *,
P - VBM 40 - . . . - *, P - VBMV 40 - . . . - *

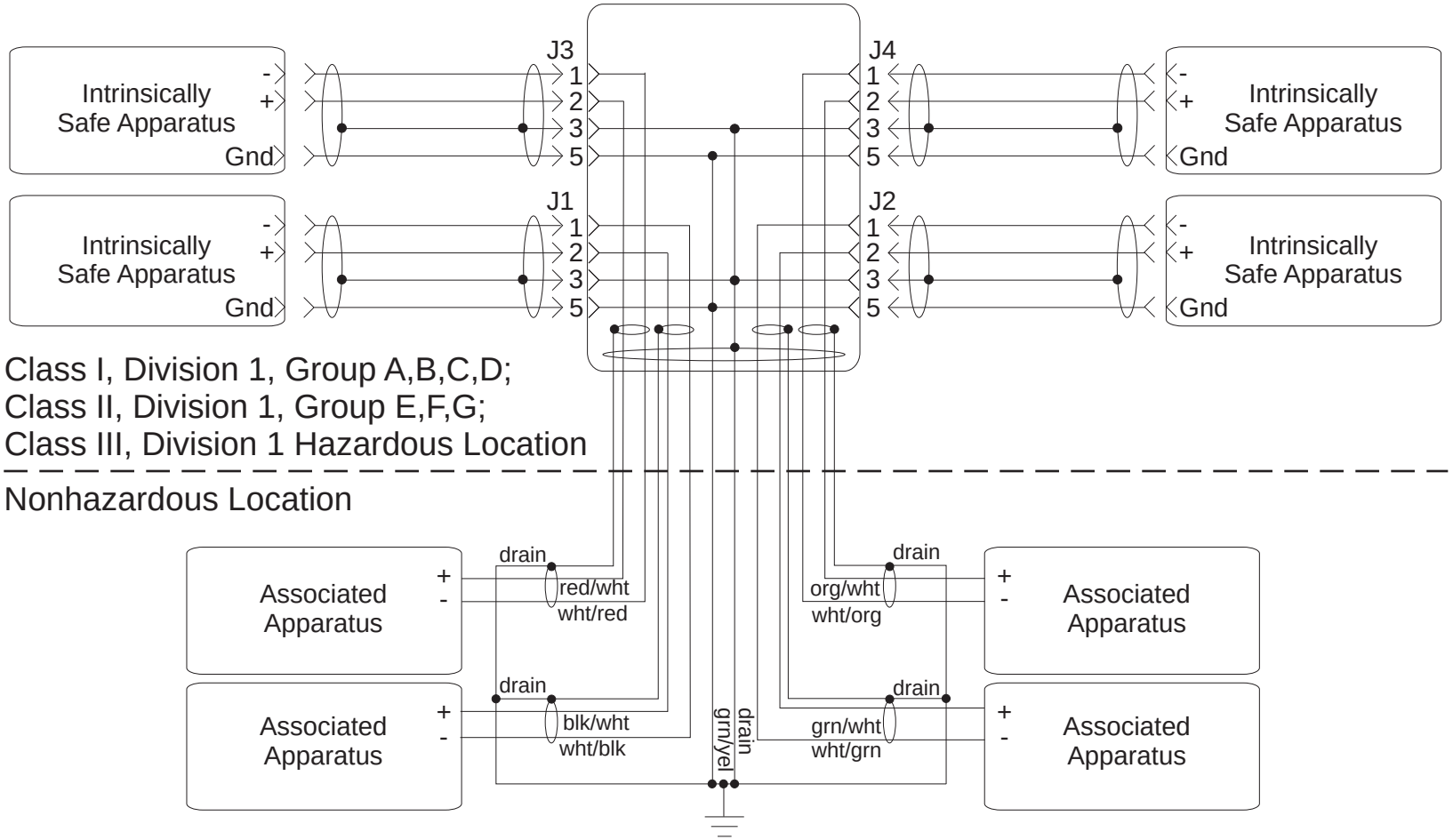

Intrinsically Safe Apparatus: Any FM approved device with Entity Concept parameters

$V_{max} \geq V_{oc}$ of the Associated Apparatus

$I_{max} \geq I_{sc}$ of the Associated Apparatus

$C_i + C_{cable} \leq C_a$ of the Associated Apparatus

$L_i + L_{cable} \leq L_a$ of the Associated Apparatus

$P_i \geq P_o$ of the Associated Apparatus

Associated Apparatus: Any FM approved device with Entity Concept parameters:

$V_{oc} \leq V_{max}$ of the Intrinsically Safe Apparatus <u>and</u> ≤ 30V

$I_{sc} \leq I_{max}$ of the Intrinsically Safe Apparatus <u>and</u> ≤ 600mA

$C_a \geq C_i$ of the Intrinsically Safe Apparatus + C_{cable}

$L_a \geq L_i$ of the Intrinsically Safe Apparatus + L_{cable}

$P_o \leq P_i$ of the Intrinsically Safe Apparatus <u>and</u> ≤ 4.5W

TURCK 3000 Campus Drive Minneapolis, MN 55441-2656	Drawing No. QCF-00147		Rev J
	Scale None	Sheet 26 of 54	

P - 4MB 12 - 4 - CS12, P - 4MBV 12 - 4 - CSV12,
P - VBM 40 - CS12, P - VBMV 40 - CSV12

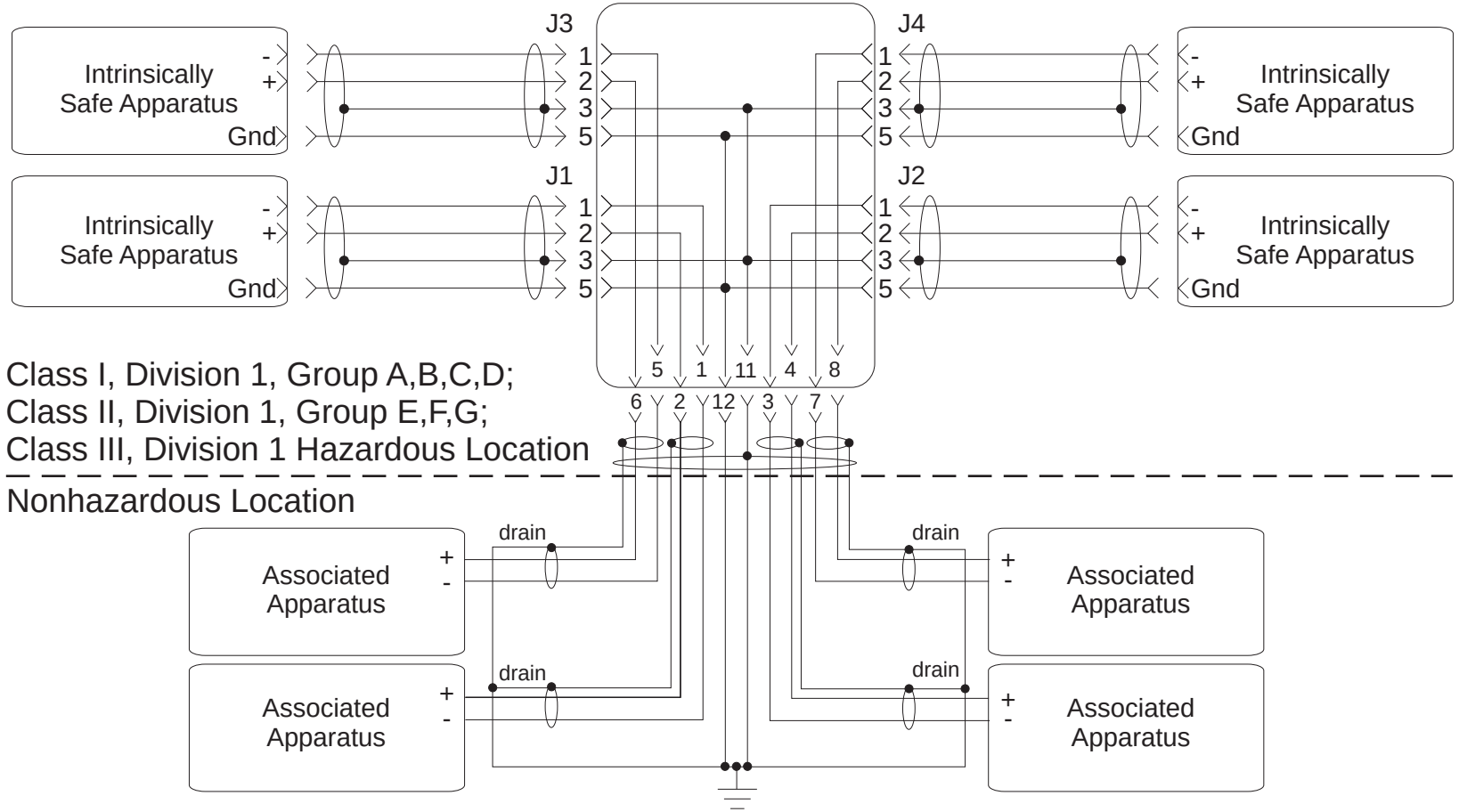

Intrinsically Safe Apparatus: Any FM approved device with Entity Concept parameters

$V_{max} \geq V_{oc}$ of the Associated Apparatus

$I_{max} \geq I_{sc}$ of the Associated Apparatus

$C_i + C_{cable} \leq C_a$ of the Associated Apparatus

$L_i + L_{cable} \leq L_a$ of the Associated Apparatus

$P_i \geq P_o$ of the Associated Apparatus

Associated Apparatus: Any FM approved device with Entity Concept parameters:

$V_{oc} \leq V_{max}$ of the Intrinsically Safe Apparatus <u>and</u> ≤ 30V

$I_{sc} \leq I_{max}$ of the Intrinsically Safe Apparatus <u>and</u> ≤ 600mA

$C_a \geq C_i$ of the Intrinsically Safe Apparatus + C_{cable}

$L_a \geq L_i$ of the Intrinsically Safe Apparatus + L_{cable}

$P_o \leq P_i$ of the Intrinsically Safe Apparatus <u>and</u> ≤ 4.5W

TURCK 3000 Campus Drive Minneapolis, MN 55441-2656	Drawing No. QCF-00147		Rev J
	Scale None	Sheet 27 of 54	

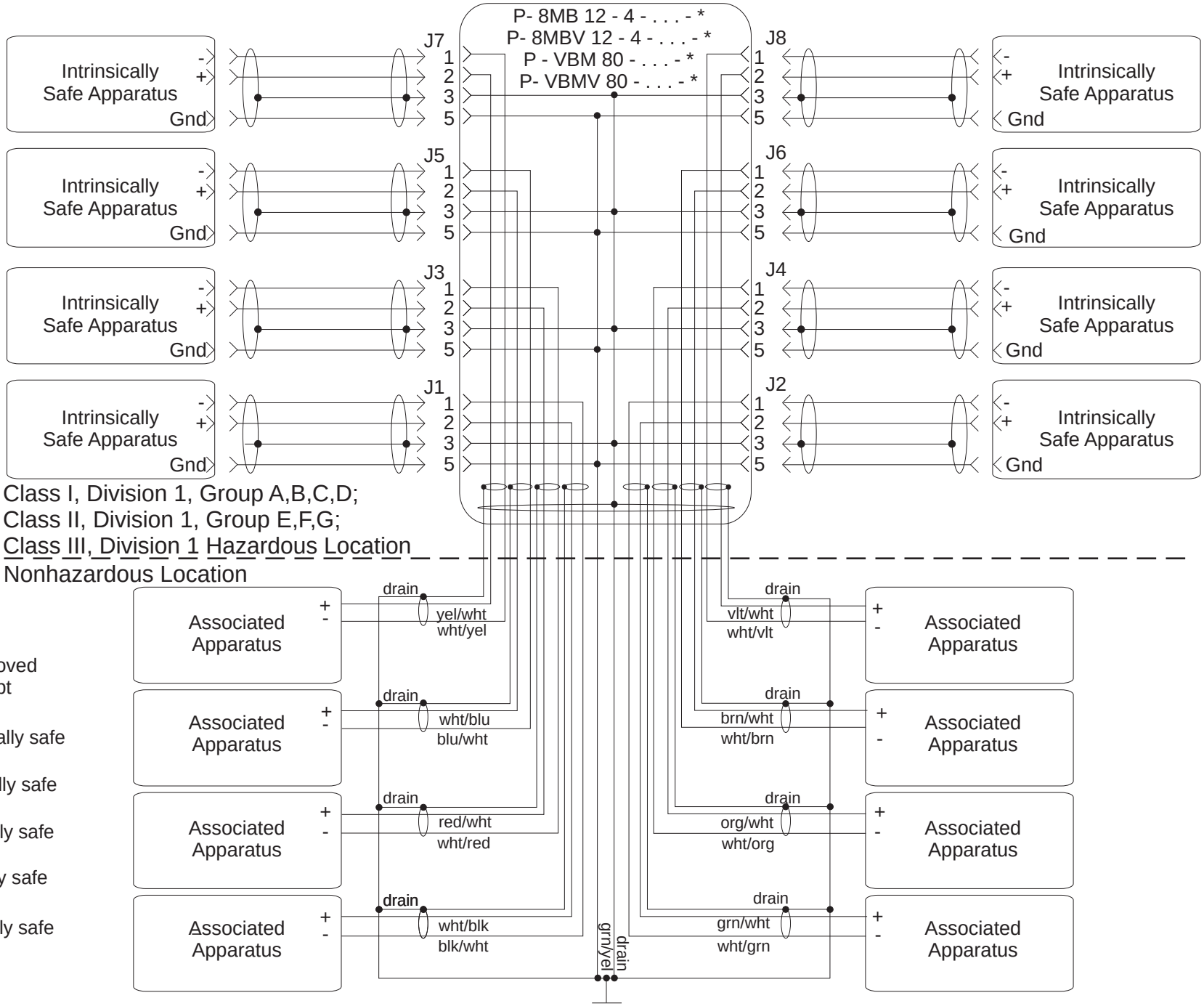

Intrinsically Safe Apparatus:
Any FM approved device with Entity Concept parameters:

- $V_{max} \geq V_{oc}$ of the associated apparatus
- $I_{max} \geq I_{sc}$ of the associated apparatus
- $C_i + C_{cable} \leq C_a$ of the associated apparatus
- $L_i + L_{cable} \leq L_a$ of the associated apparatus
- $P_i \geq P_o$ of the associated apparatus

Associated Apparatus:
Any Factory Mutual approved device with Entity Concept parameters:

- $V_{oc} \leq V_{max}$ of the intrinsically safe apparatus and ≤ 30V
- $I_{sc} \leq I_{max}$ of the intrinsically safe aparatus and ≤ 600mA
- $C_a \geq C_i$ of the intrinsically safe apparatus + C_{cable}
- $L_a \geq L_i$ or the intrinsically safe apparatus + L_{cable}
- $P_o \leq P_i$ of the intrinsically safe apparatus and < 4.5W

TURCK 3000 Campus Drive Minneapolis, MN 55441-2656	Drawing No. QCF-00147		Rev J
	Scale None	Sheet 28 of 54	

Intrinsically Safe Apparatus:
Any FM approved device with Entity Concept parameters:

$V_{max} \geq V_{oc}$ of the associated apparatus

$I_{max} \geq I_{sc}$ of the associated apparatus

$C_i + C_{cable} \leq C_a$ of the associated apparatus

$L_i + L_{cable} \leq L_a$ of the associated apparatus

$P_i \geq P_o$ of the associated apparatus

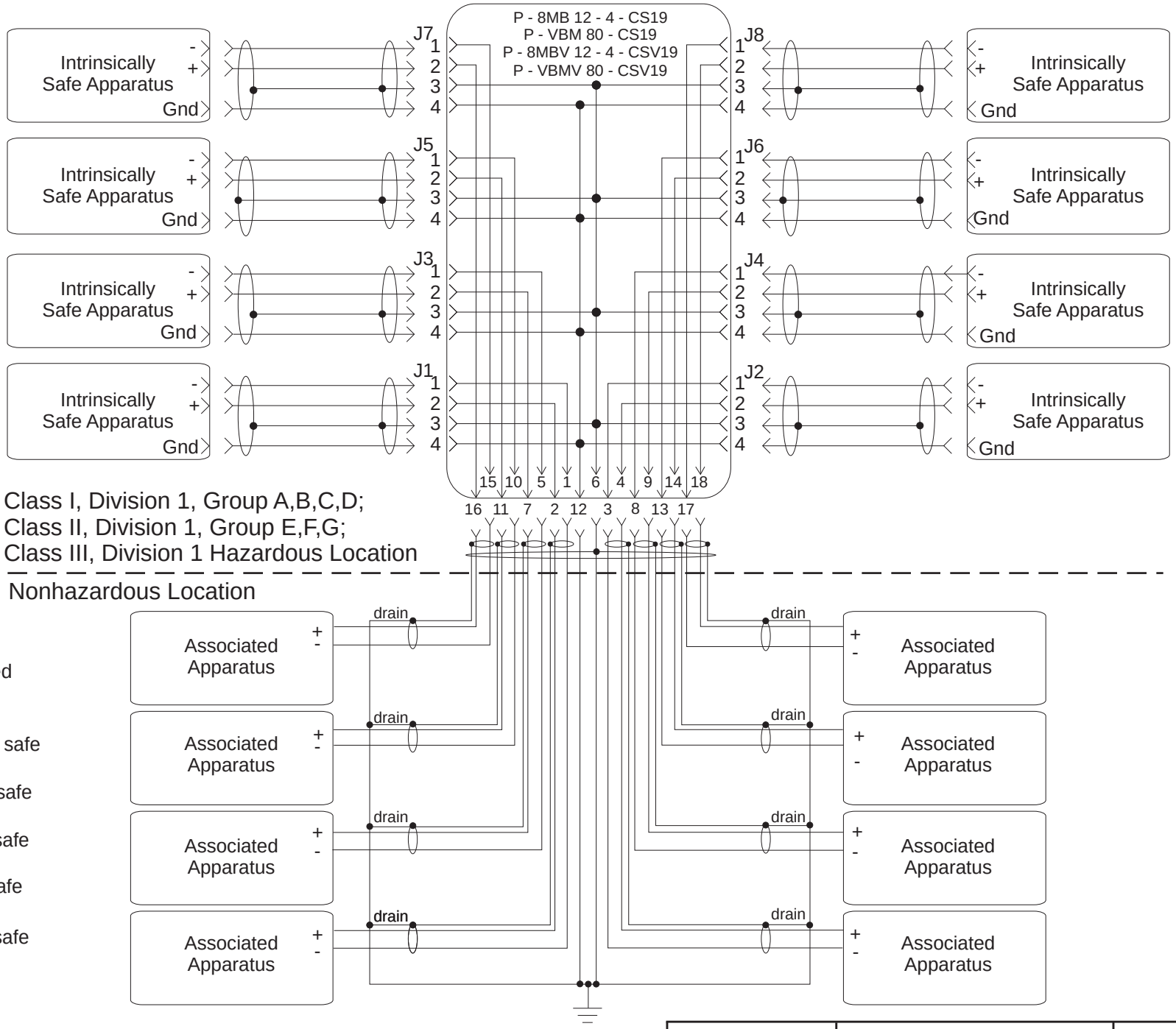

Associated Apparatus:
Any Factory Mutual approved device with Entity Concept parameters:

$V_{oc} \leq V_{max}$ of the intrinsically safe apparatus and ≤ 30V

$I_{sc} \leq I_{max}$ of the intrinsically safe aparatus and ≤ 600mA

$C_a \geq C_i$ of the intrinsically safe apparatus + C_{cable}

$L_a \geq L_i$ or the intrinsically safe apparatus + L_{cable}

$P_o \leq P_i$ of the intrinsically safe apparatus <u>and</u> < 4.5W

TURCK 3000 Campus Drive Minneapolis, MN 55441-2656	Drawing No. QCF-00147		Rev J
	Scale None	Sheet 29 of 54	

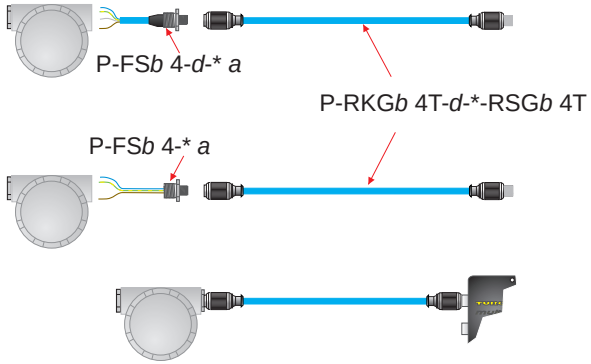

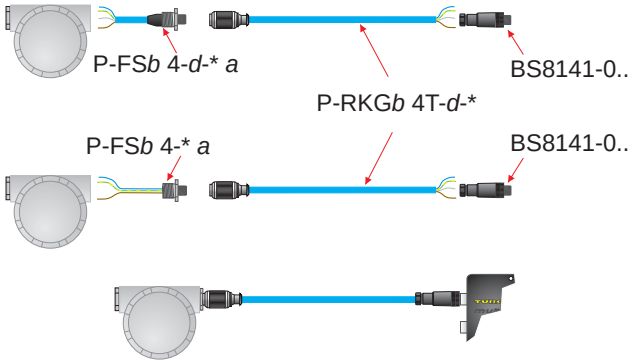

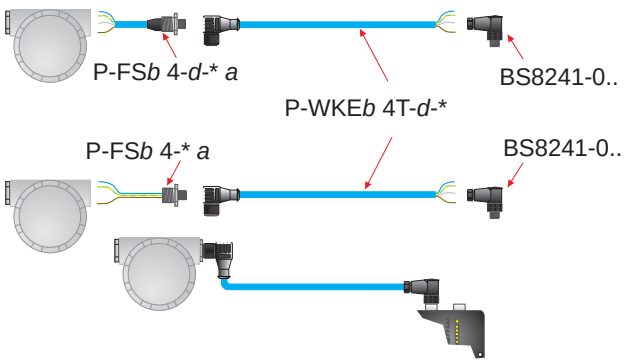

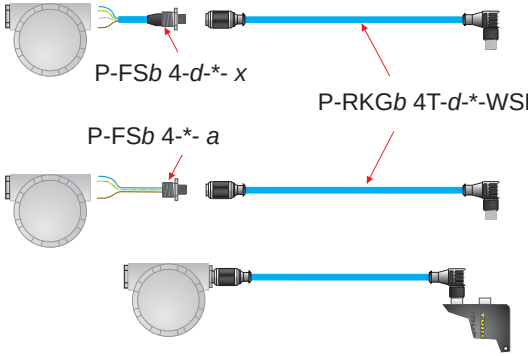

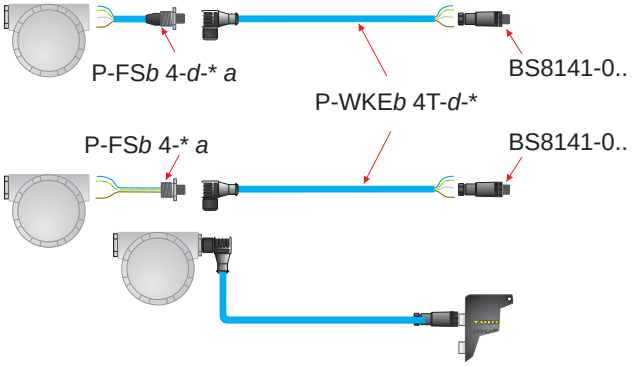

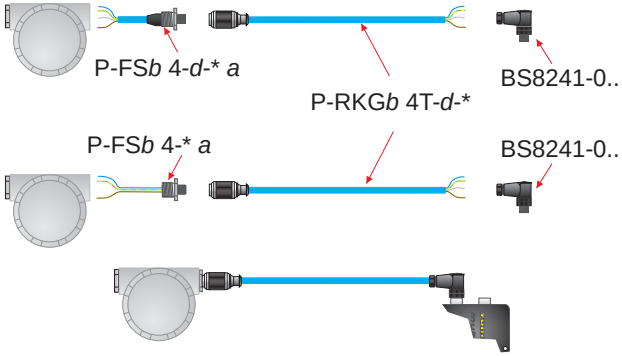

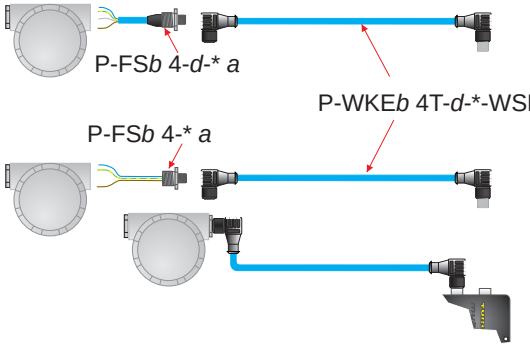

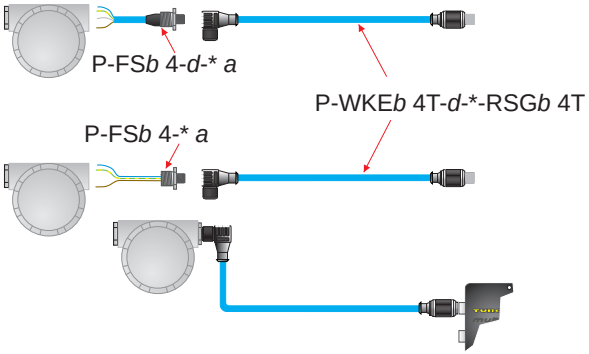

KEY

a = /14.5/NPT, /14.75/NPT, /M20, or blank

b = V or blank

c = M or V

d = 3 or 4-digit ITC or PLTC cable number

= Intrinsically Safe Apparatus, FM approved for Class I, Division 1

= Turck multibox with *eurofast* port connectors, part numbers identified on Sheets 16-18.

TURCK 3000 Campus Drive Minneapolis, MN 55441-2656	Drawing No. QCF-00147		Rev J
	Scale None	Sheet 30 of 54	

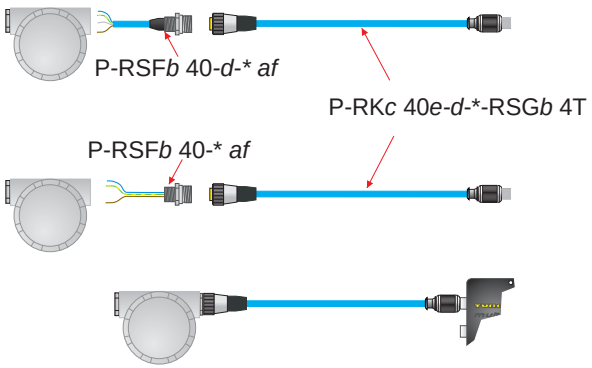

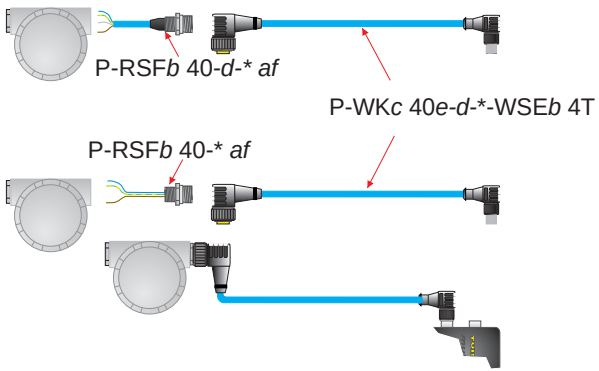

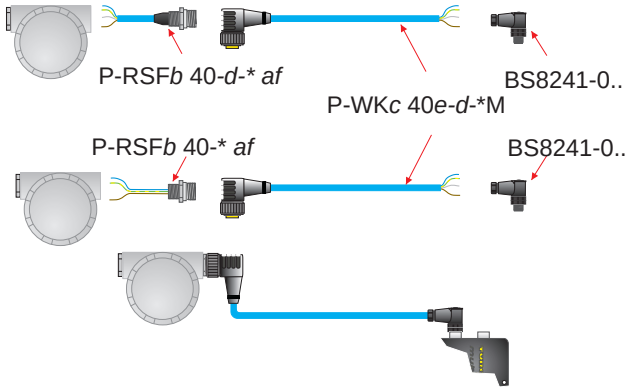

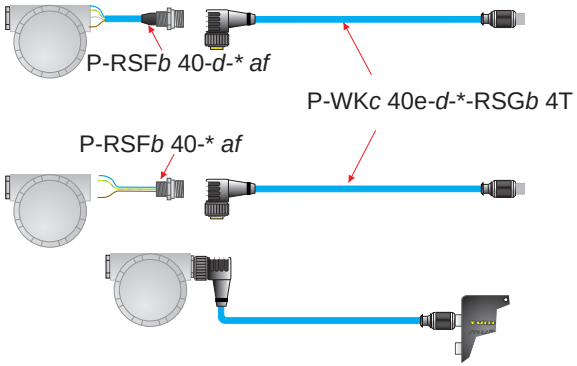

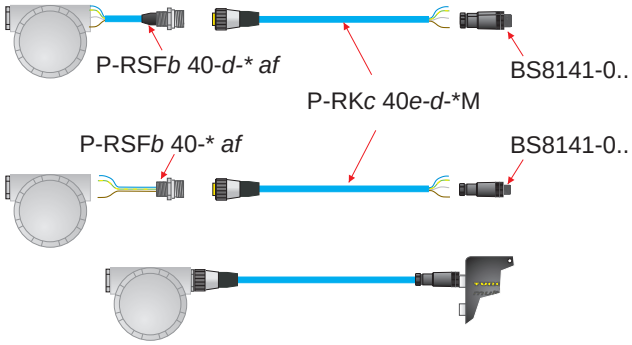

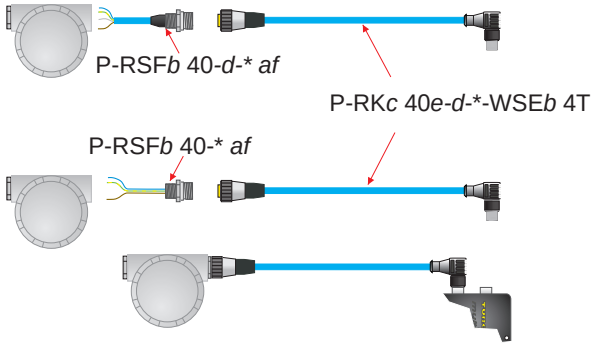

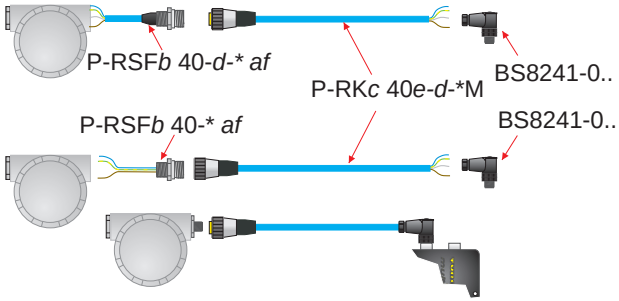

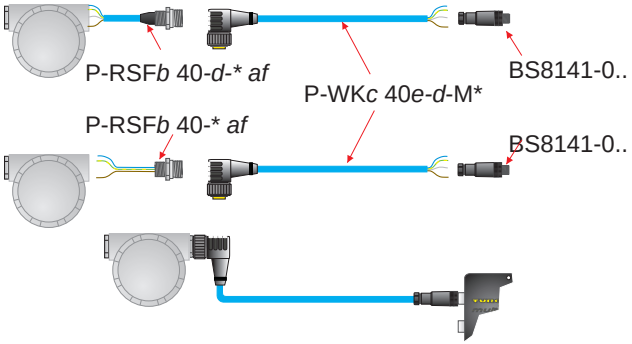

KEY

a = /14.5/NPT, /14.75/NPT, /M20, or blank

b = V or blank

c = M or V

d = 3 or 4-digit ITC or PLTC cable number

e = H or blank

f = /S3256 or blank

= Intrinsically Safe Apparatus, FM approved for Class I, Division 1

= Turck multibox with *eurofast* port connectors, part numbers identified on Sheets 16-18.

TURCK 3000 Campus Drive Minneapolis, MN 55441-2656	Drawing No. QCF-00147		Rev J
	Scale None	Sheet 31 of 54	

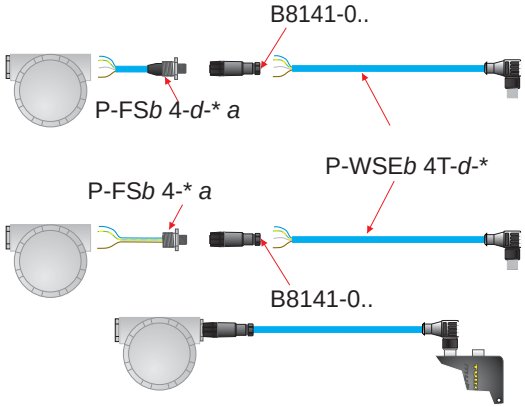

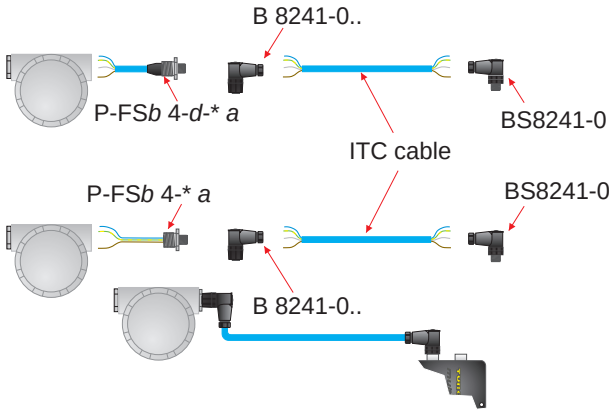

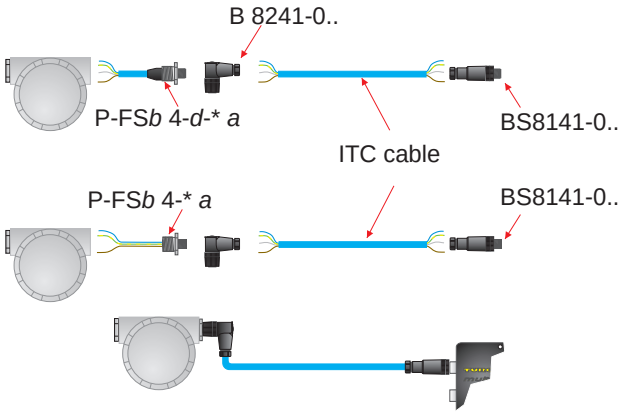

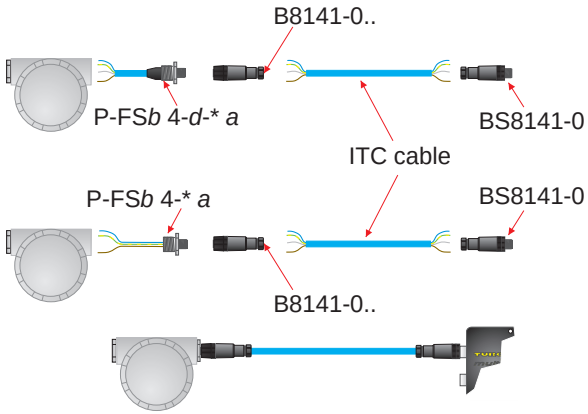

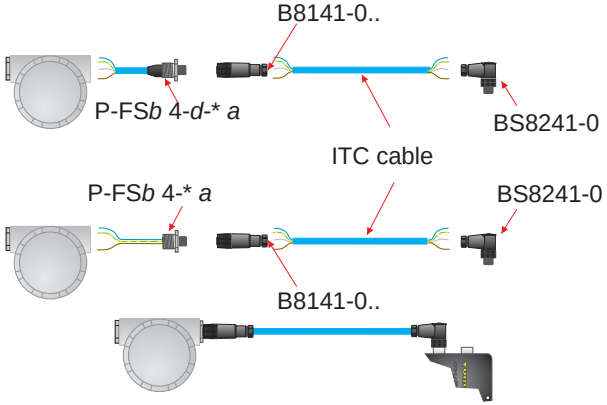

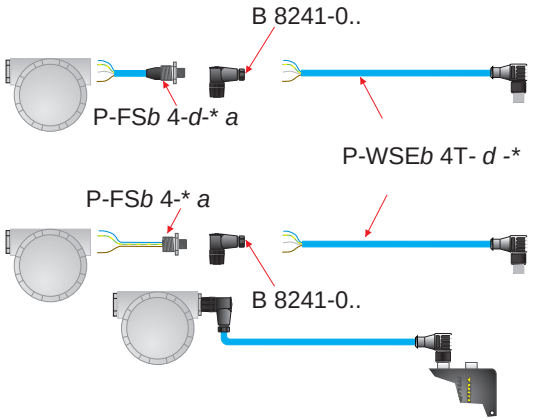

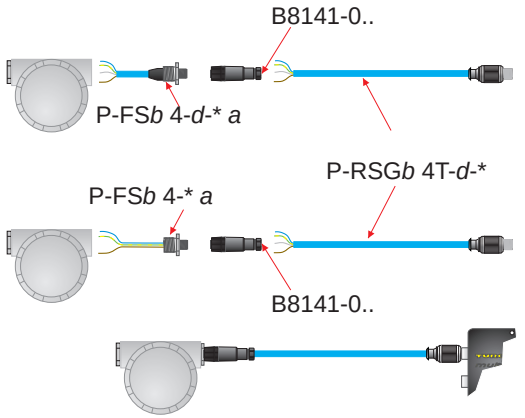

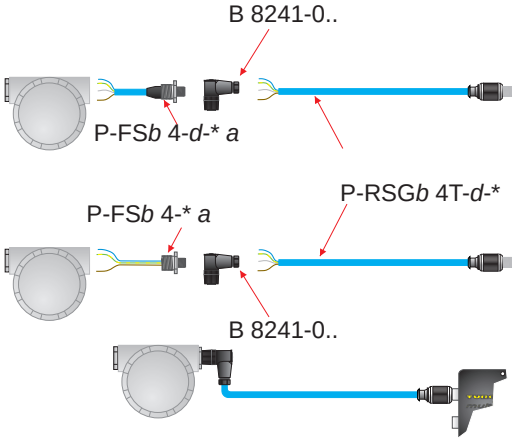

KEY

a = /14.5/NPT, /14.75/NPT, /M20, or blank

b = V or blank

c = M or V

d = 3 or 4-digit ITC or PLTC cable number

= Intrinsically Safe Apparatus, FM approved for Class I, Division 1

= Turck multibox with *eurofast* port connectors, part numbers identified on Sheets 16-18.

TURCK 3000 Campus Drive Minneapolis, MN 55441-2656	Drawing No. QCF-00147		Rev J
	Scale None	Sheet 32 of 54	

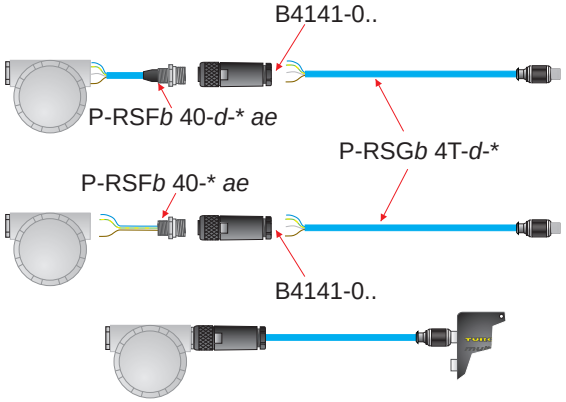

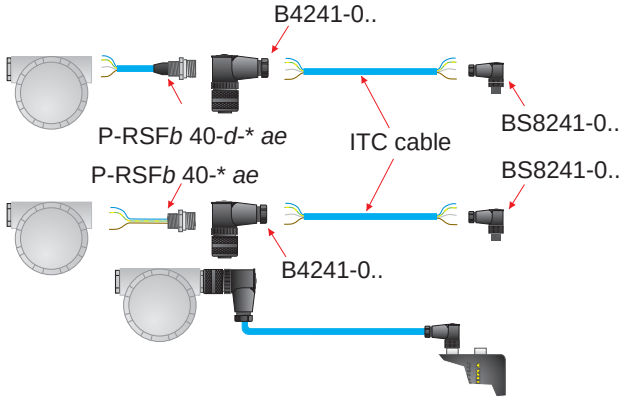

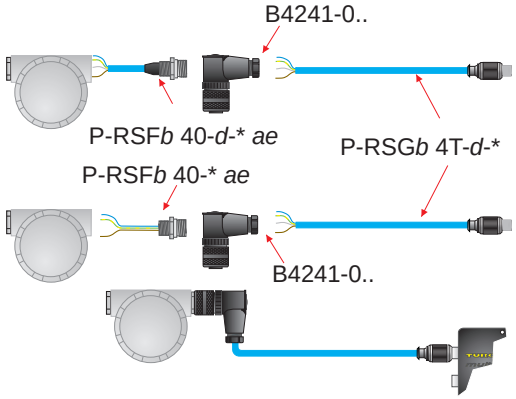

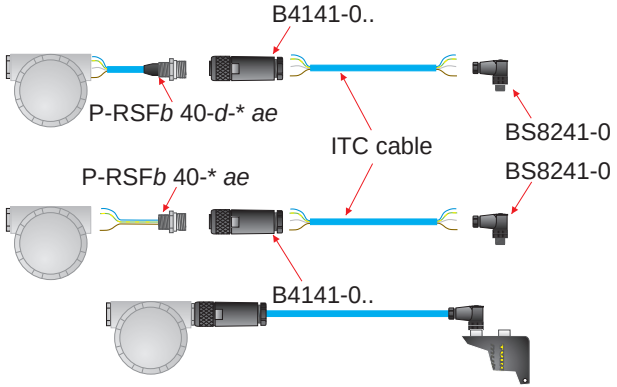

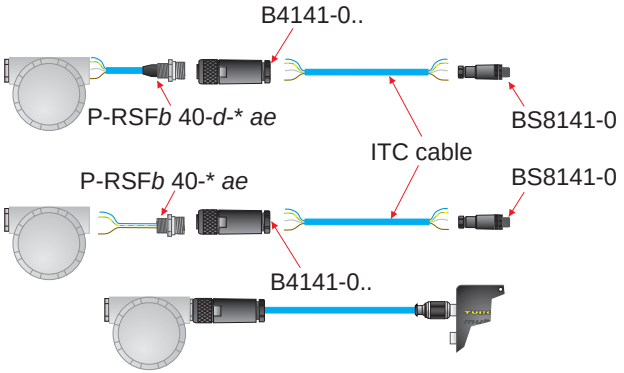

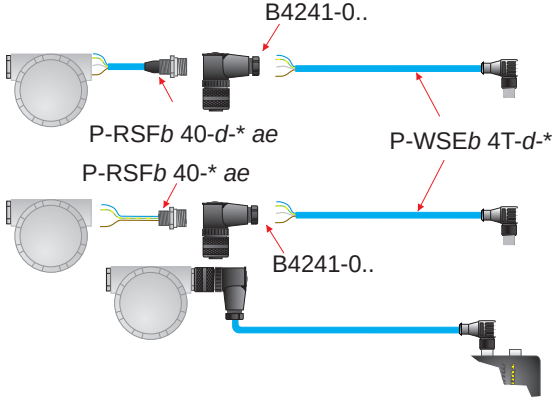

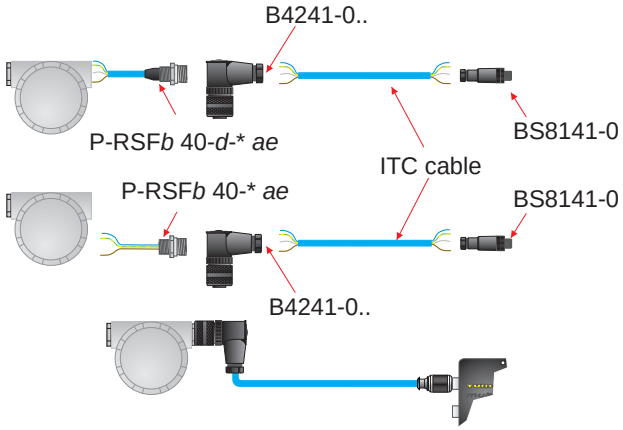

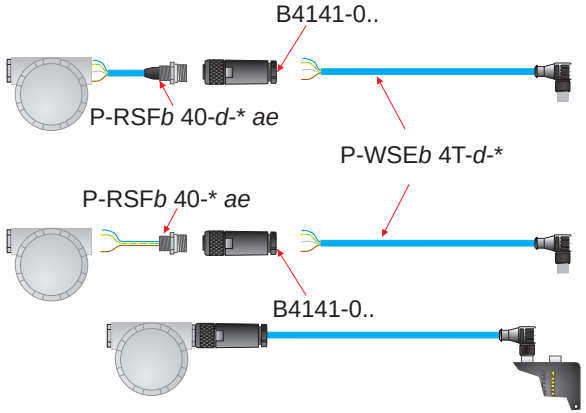

KEY

a = /14.5/NPT, /14.75/NPT, /M20, or blank

b = V or blank

c = M or V

d = 3 or 4-digit ITC or PLTC cable number

e = /S3256 or blank

= Intrinsically Safe Apparatus, FM approved for Class I, Division 1

= Turck multibox with *eurofast* port connectors, part numbers identified on Sheets 16-18.

TURCK 3000 Campus Drive Minneapolis, MN 55441-2656	Drawing No. QCF-00147		Rev J
	Scale None	Sheet 33 of 54	

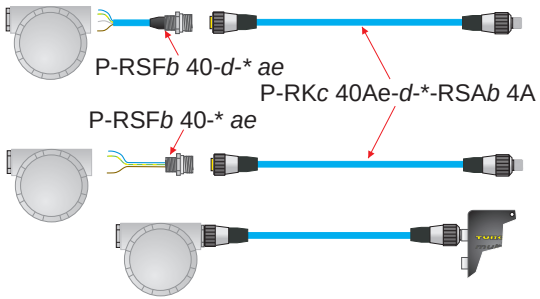

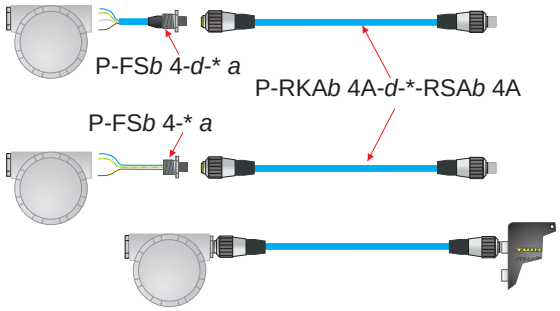

KEY

a = /14.5/NPT, /14.75/NPT, /M20, or blank

b = V or blank

c = M or V

d = 3 or 4-digit ITC or PLTC cable number

e = /S3256 or blank

= Intrinsically Safe Apparatus, FM approved for Class I, Division 1

= Turck multibox with *eurofast* port connectors, part numbers identified on Sheets 16-18.

TURCK 3000 Campus Drive Minneapolis, MN 55441-2656	Drawing No. QCF-00147		Rev J
	Scale None	Sheet 34 of 54	

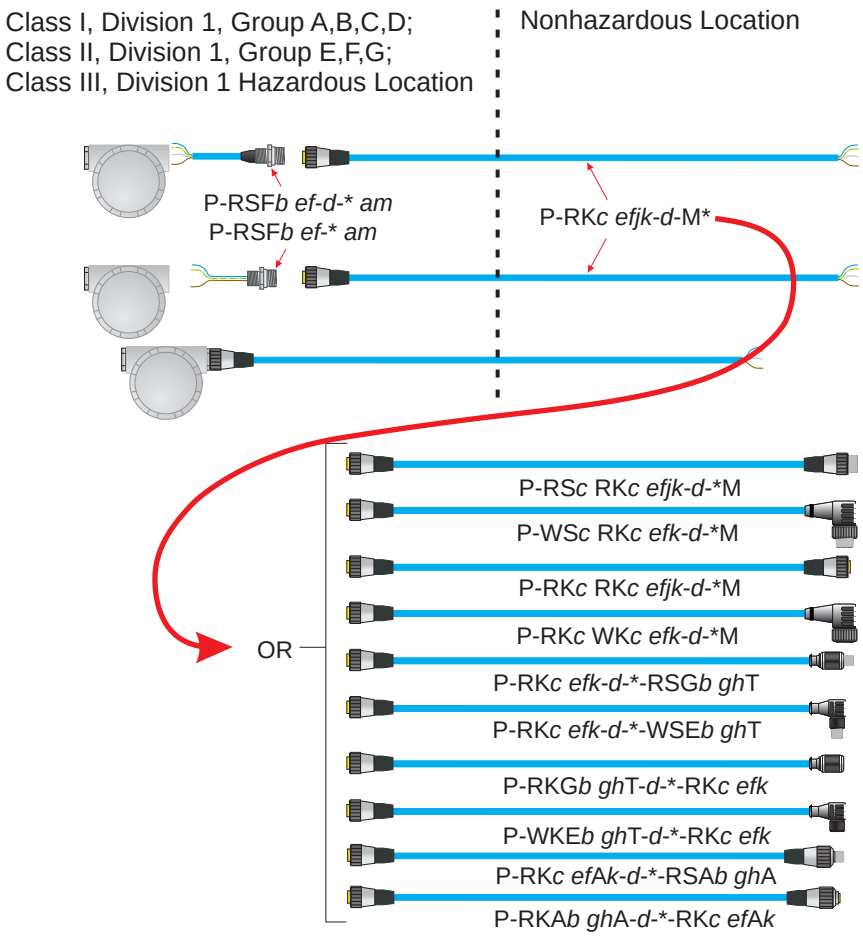

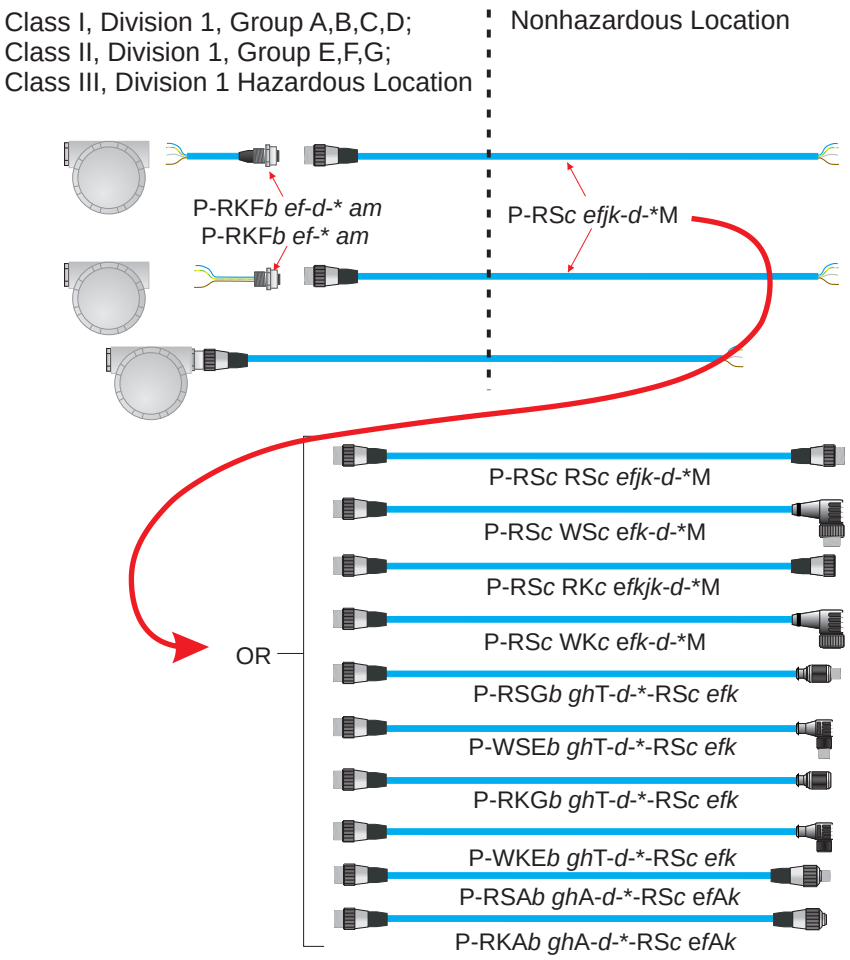

Notes:

1. Key: *a* = /14.5/NPT, /14.75/NPT, /M20, or blank *b* = V or blank *c* = M or V *d* = 3 or 4-digit ITC or PLTC cable number e = 2, 3, 4, 5, or 6
   f = 0, 1, 2, 3, . . . 9, 01, 02, 03, . . . 99 *g* = 4 or 5 *h* = .1, .2, .3, ...99, or blank *j* = A or blank k = H or blank *m* = /S3256 or blank

   = Intrinsically Safe Apparatus, FM approved for Class I, Division 1

2. The installation must be in accordance with the National Electrical Code (NEC), ANSI/NFPA 70. Specific requirements for the installation of PLTC rated and ITC rated cable may be found in Article 501, Article 725 and Article 727.
3. The molded construction of the home-run cable and the gas/vaportight continuous sheath of the cable meet the requirements of the NEC, Article 501, for cable seals in Class I, Divisions 1 and 2.

TURCK 3000 Campus Drive Minneapolis, MN 55441-2656	Drawing No. QCF-00147		Rev J
	Scale None	Sheet 35 of 54	

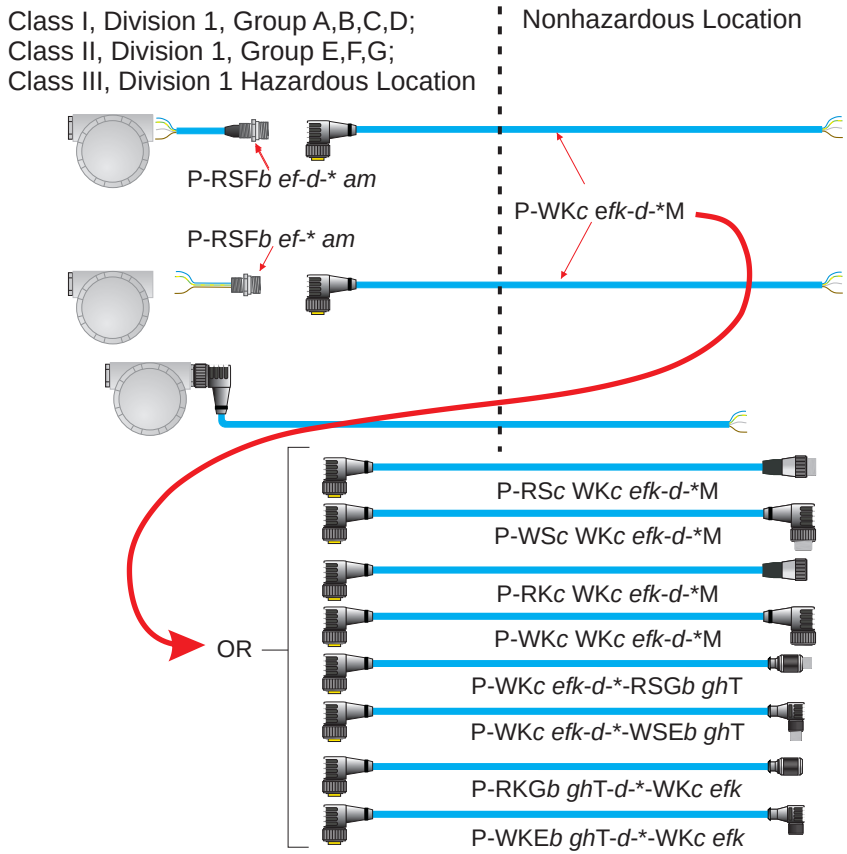

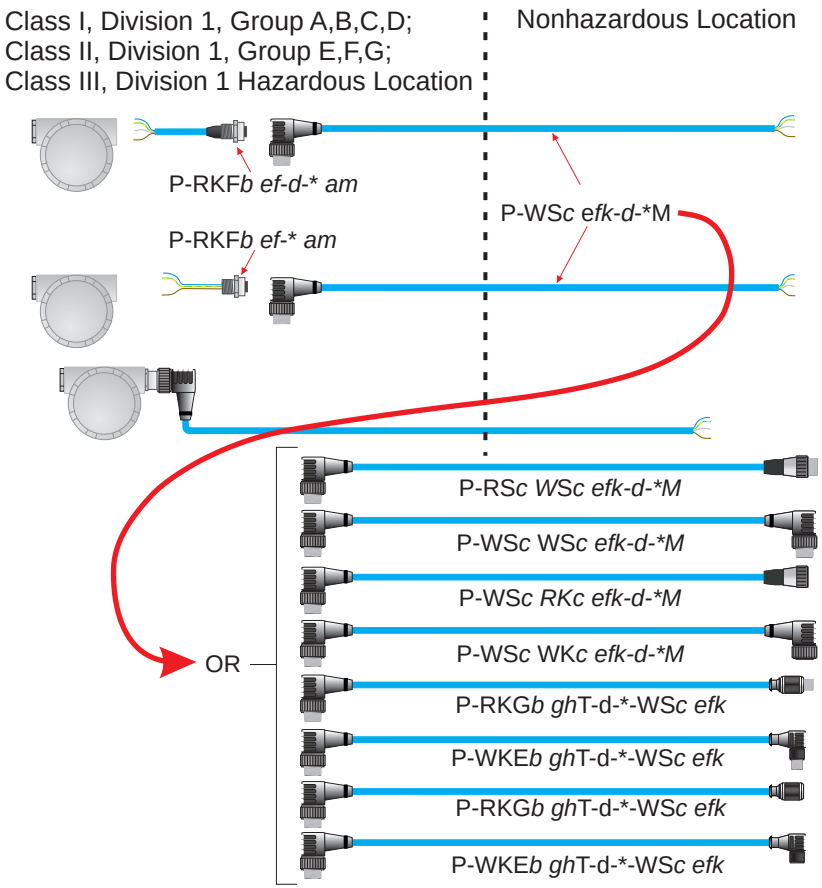

Notes:

1. Key: *a* = /14.5/NPT, /14.75/NPT, /M20, or blank *b* = V or blank *c* = M or V *d* = 3 or 4-digit ITC or PLTC cable number
   e = 2, 3, 4, 5, or 6 *f* = 0, 1, 2, 3, . . . 9, 01, 02, 03, . . . 99 *g* = 4 or 5 *h* = .1, .2, .3, ...99, or blank *k* = H or blank *m* = /S3256 or blank

   = Intrinsically Safe Apparatus, FM approved for Class I, Division 1

2. The installation must be in accordance with the National Electrical Code (NEC), ANSI/NFPA 70. Specific requirements for the installation of PLTC rated and ITC rated cable may be found in Article 501, Article 725 and Article 727.

3. The molded construction of the home-run cable and the gas/vaportight continuous sheath of the cable meet the requirements of the NEC, Article 501, for cable seals in Class I, Divisions 1 and 2.

TURCK 3000 Campus Drive Minneapolis, MN 55441-2656	Drawing No. QCF-00147		Rev J
	Scale None	Sheet 36 of 54	

Class I, Division 1, Group A,B,C,D;
Class II, Division 1, Group E,F,G;
Class III, Division 1 Hazardous Location

Nonhazardous Location

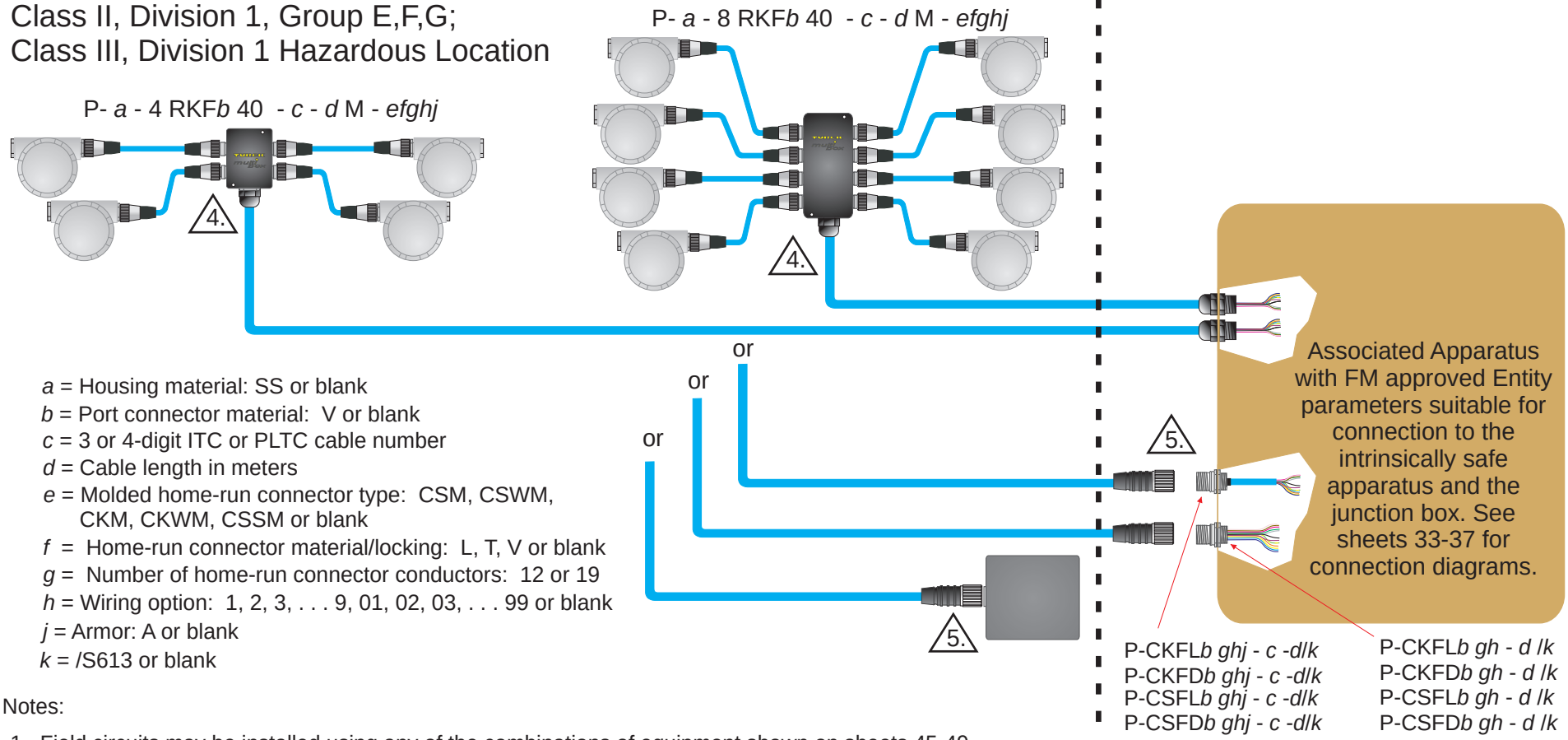

a = Housing material: SS or blank
b = Port connector material: V or blank
c = 3 or 4-digit ITC or PLTC cable number
d = Cable length in meters
e = Molded home-run connector type: CSM, CSWM, CKM, CKWM, CSSM or blank
f = Home-run connector material/locking: L, T, V or blank
g = Number of home-run connector conductors: 12 or 19
h = Wiring option: 1, 2, 3, . . . 9, 01, 02, 03, . . . 99 or blank
j = Armor: A or blank
k = /S613 or blank

Notes:

1. Field circuits may be installed using any of the combinations of equipment shown on sheets 45-49.
2. The installation must be in accordance with the National Electrical Code, ANSI/NFPA 70. Specific requirements for the installation or PLTC rated and ITC rated cable may be found in Article 501, Article 725 and Article 727.
3. The Entity Concept allows the interconnection of intrinsically safe apparatus and associated apparatus not specifically examined in combination as a system when the following conditions are met:
   $V_{max} \geq V_{oc}$ or V_t $I_{max} \geq I_{sc}$ or I_t $C_{i\,(total)} + C_{cable} \leq C_a$ $L_{i\,(total)} + L_{cable} \leq L_a$
   Junction box Entity Parameters (per circuit):
   $V_{max} = 30V$ $I_{max} = 600mA$ $C_i = 0$ $L_i = 0$
4. The potted-in construction of the integral home-run cable and the gas/vaportight continuous sheath of the cable meets the requirements of the NEC, Article 501, for cable seals in Class I, Divisions 1 and 2.
5. When *e* = CSM..., CKM..., CSSM..., or CXM..., a connector is molded to the end of the home-run cable.
6. WARNING: The P-.- 4 RKF.. and P-.- 8 RKF.. junction box enclosures contain aluminum and are considered to constitute a potential risk of ignition by impact or friction. Care must be taken into account during installation and use to prevent impact or friction.

TURCK 3000 Campus Drive Minneapolis, MN 55441-2656	Drawing No. QCF-00147		Rev J
	Scale None	Sheet 37 of 54	

Class I, Division 1, Group A,B,C,D;
Class II, Division 1, Group E,F,G;
Class III, Division 1 Hazardous Location

Nonhazardous Location

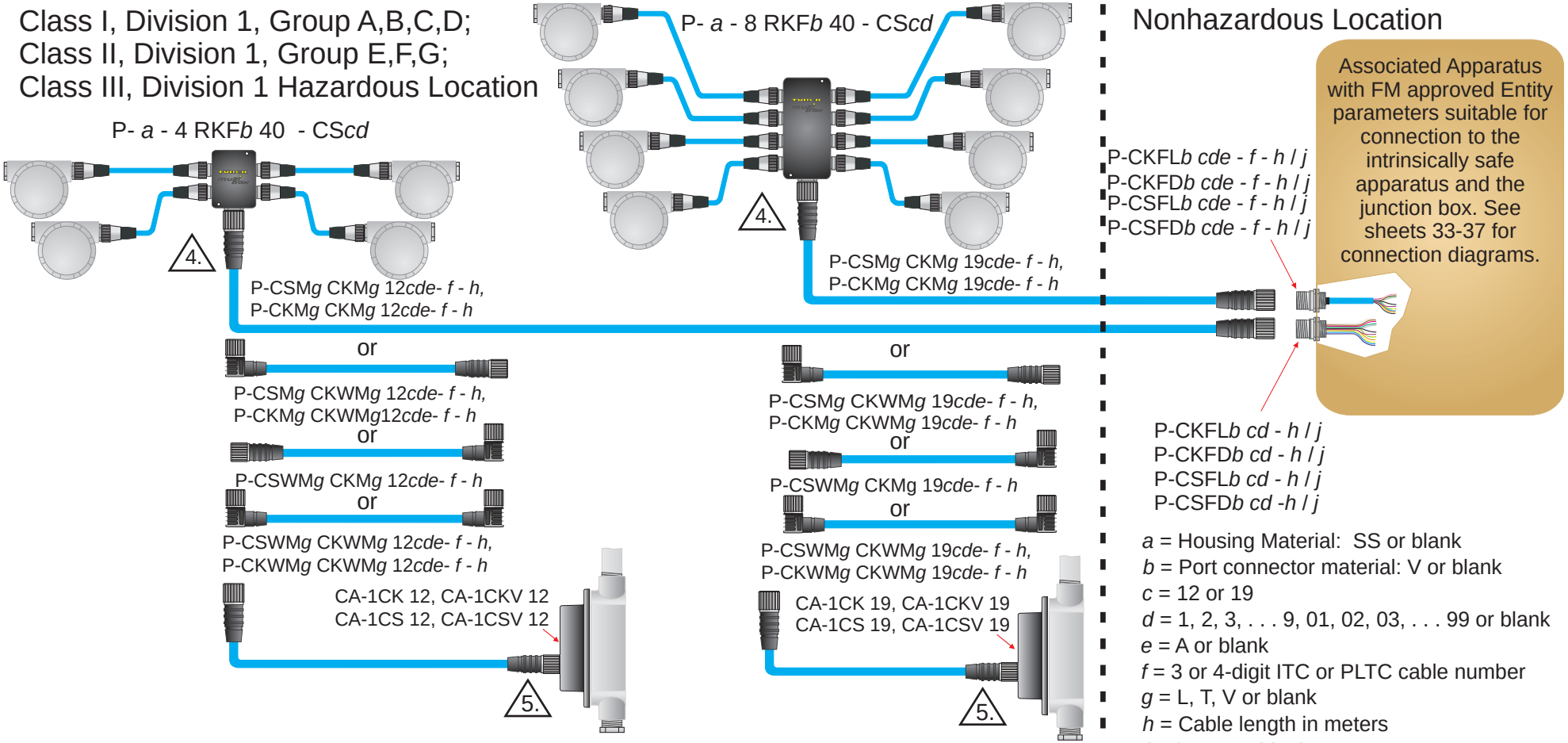

a = Housing Material: SS or blank
b = Port connector material: V or blank
c = 12 or 19
d = 1, 2, 3, . . . 9, 01, 02, 03, . . . 99 or blank
e = A or blank
f = 3 or 4-digit ITC or PLTC cable number
g = L, T, V or blank
h = Cable length in meters
j = /S613 or blank

Notes:

1. Field circuits may be installed using any of the combinations of equipment shown on sheets 45-49.
2. The installation must be in accordance with the National Electrical Code, ANSI/NFPA 70. Specific requirements for the installation or PLTC rated and ITC rated cable may be found in Article 501, Article 725 and Article 727.
3. The Entity Concept allows the interconnection of intrinsically safe apparatus and associated apparatus not specifically examined in combination as a system when the following conditions are met:

   $V_{max} \geq V_{oc}$ or V_t $I_{max} \geq I_{sc}$ or I_t $C_{i\,(total)} + C_{cable} \leq C_a$ $L_{i\,(total)} + L_{cable} \leq L_a$

   Junction box Entity Parameters (per circuit):

   $V_{max} = 30V$ $I_{max} = 600mA$ $C_i = 0$ $L_i = 0$

4. The molded construction of the home-run cable and the gas/vaportight continuous sheath of the cable meets the requirements of the NEC, Article 501, for cable seals in Class I, Divisions 1 and 2. P-CKM... home run connectors must either be securely connected to the junction box or plugged using a Turck CS-CC closure cap.
5. See Sheet 19 for installation of CA -... conduit body adaptors.
6. WARNING: The P-.- 4 RKF.. and P-.- 8 RKF.. junction box enclosures contain aluminum and are considered to constitute a potential risk of ignition by impact or friction. Care must be taken into account during installation and use to prevent impact or friction.
7. Parts of the CA-1CK.. conduit adaptor exclosures are constructed from plastic. To prevent the risk of electrostatic sparking, the plastic should only be cleaned with a damp cloth.

TURCK 3000 Campus Drive Minneapolis, MN 55441-2656	Drawing No. QCF-00147		Rev J
	Scale None	Sheet 38 of 54	

Class I, Division 1, Group A,B,C,D;
Class II, Division 1, Group E,F,G;
Class III, Division 1 Hazardous Location

Nonhazardous Location

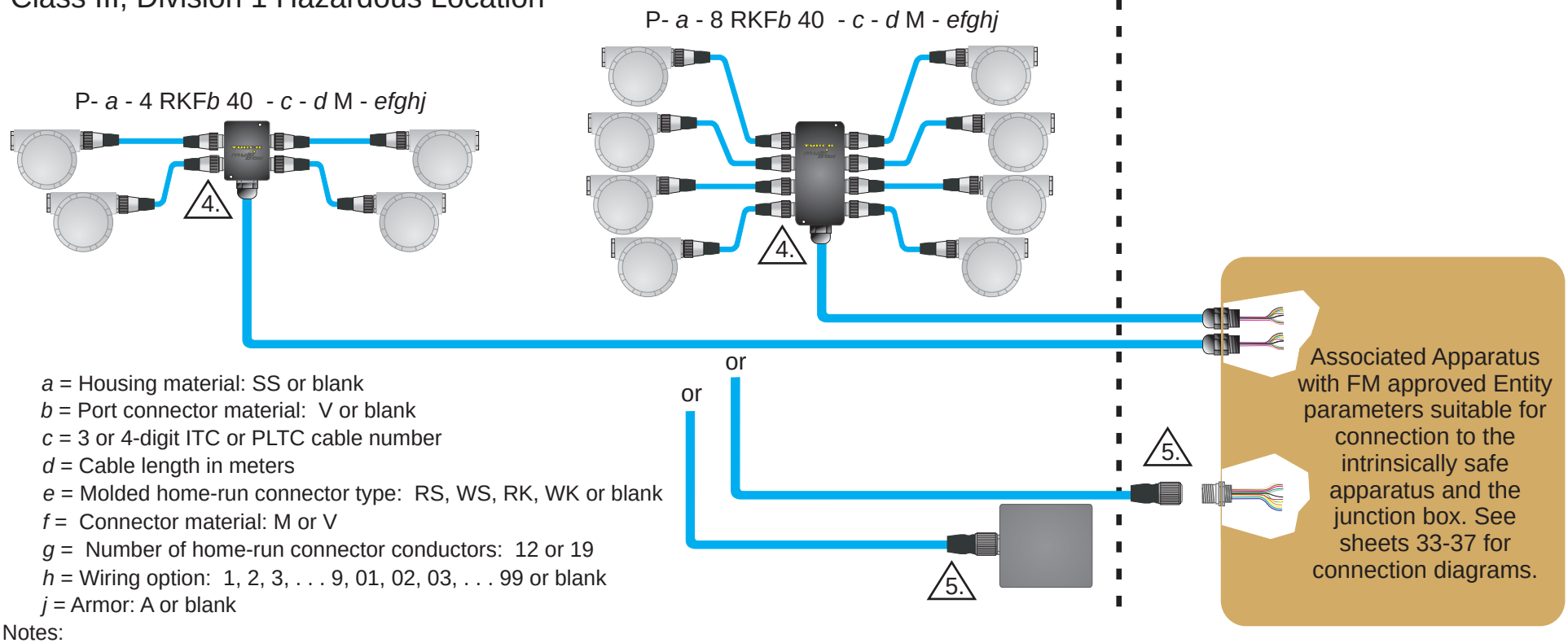

a = Housing material: SS or blank
b = Port connector material: V or blank
c = 3 or 4-digit ITC or PLTC cable number
d = Cable length in meters
e = Molded home-run connector type: RS, WS, RK, WK or blank
f = Connector material: M or V
g = Number of home-run connector conductors: 12 or 19
h = Wiring option: 1, 2, 3, . . . 9, 01, 02, 03, . . . 99 or blank
j = Armor: A or blank

Notes:

1. Field circuits may be installed using any of the combinations of equipment shown on sheets 45-49.
2. The installation must be in accordance with the National Electrical Code, ANSI/NFPA 70. Specific requirements for the installation or PLTC rated and ITC rated cable may be found in Article 501, Article 725 and Article 727.
3. The Entity Concept allows the interconnection of intrinsically safe apparatus and associated apparatus not specifically examined in combination as a system when the following conditions are met:

   $V_{max} \geq V_{oc}$ or V_t $I_{max} \geq I_{sc}$ or I_t $C_{i\,(total)} + C_{cable} \leq C_a$ $L_{i\,(total)} + L_{cable} \leq L_a$

   Junction box Entity Parameters (per circuit):

   $V_{max} = 30V$ $I_{max} = 600mA$ $C_i = 0$ $L_i = 0$

4. The potted-in construction of the integral home-run cable and the gas/vaportight continuous sheath of the cable meets the requirements of the NEC, Article 501, for cable seals in Class I, Divisions 1 and 2.
5. When *e* = RS, WS, RK or WK, a *minifast* B- or C-size connector is molded to the end of the home-run cable for installation per Turck control drawing Ni-2.407.
6. WARNING: The P-.-.4 RKF.. and P-.-.8 RKF.. junction box enclosures contain aluminum and are considered to constitute a potential risk of ignition by impact or friction. Care must be taken into account during installation and use to prevent impact or friction.
7. Parts of the CA-1CK.. conduit adaptor exclosures are constructed from plastic. To prevent the risk of electrostatic sparking, the plastic should only be cleaned with a damp cloth.

TURCK 3000 Campus Drive Minneapolis, MN 55441-2656	Drawing No. QCF-00147		Rev J
	Scale None	Sheet 39 of 54	

Class I, Division 1, Group A,B,C,D;
Class II, Division 1, Group E,F,G;
Class III, Division 1 Hazardous Location

Nonhazardous Location

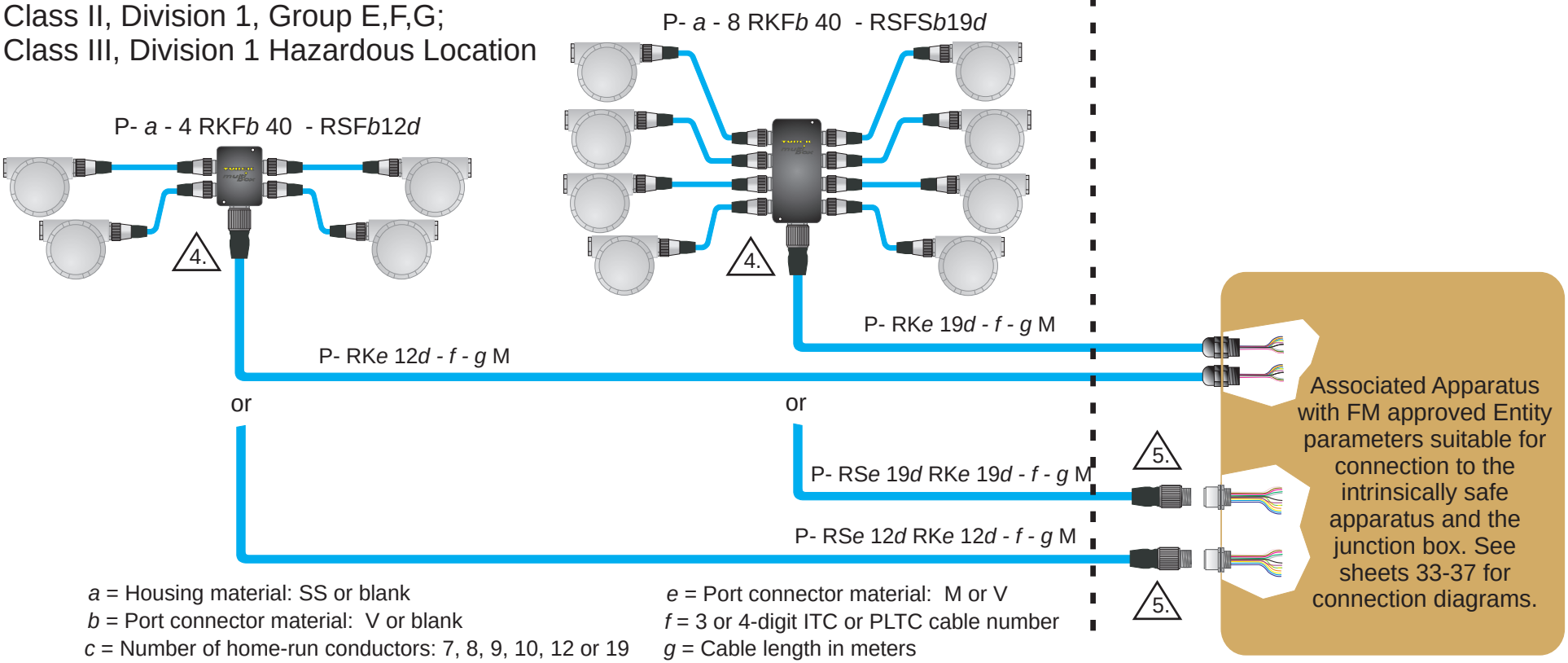

a = Housing material: SS or blank
b = Port connector material: V or blank
c = Number of home-run conductors: 7, 8, 9, 10, 12 or 19
d = Wiring option: 1, 2, 3, . . . 9, 01, 02, 03, . . . 99 or blank
e = Port connector material: M or V
f = 3 or 4-digit ITC or PLTC cable number
g = Cable length in meters

Notes:

1. Field circuits may be installed using any of the combinations of equipment shown on sheets 45-49.
2. The installation must be in accordance with the National Electrical Code, ANSI/NFPA 70. Specific requirements for the installation or PLTC rated and ITC rated cable may be found in Article 501, Article 725 and Article 727.
3. The Entity Concept allows the interconnection of intrinsically safe apparatus and associated apparatus not specifically examined in combination as a system when the following conditions are met:

   $V_{max} \geq V_{oc}$ or V_t $I_{max} \geq I_{sc}$ or I_t $C_{i\,(total)} + C_{cable} \leq C_a$ $L_{i\,(total)} + L_{cable} \leq L_a$

   Junction box Entity Parameters (per circuit):

   $V_{max} = 30V$ $I_{max} = 600mA$ $C_i = 0$ $L_i = 0$

4. The molded construction of the home-run cable and the gas/vaportight continuous sheath of the cable meets the requirements of the NEC, Article 501, for cable seals in Class I, Divisions 1 and 2. P-CKM... home run connectors must either be securely connected to the junction box or plugged using a Turck CS-CC closure cap.

5. B- and C-size *minifast* home-run cables and receptacles may be installed per Turck control drawing Ni-2.407.

6. WARNING: The P-.-.4 RKF.. and P-.-.8 RKF.. junction box enclosures contain aluminum and are considered to constitute a potential risk of ignition by impact or friction. Care must be taken into account during installation and use to prevent impact or friction.
7. Parts of the CA-1CK.. conduit adaptor exclosures are constructed from plastic. To prevent the risk of electrostatic sparking, the plastic should only be cleaned with a damp cloth.

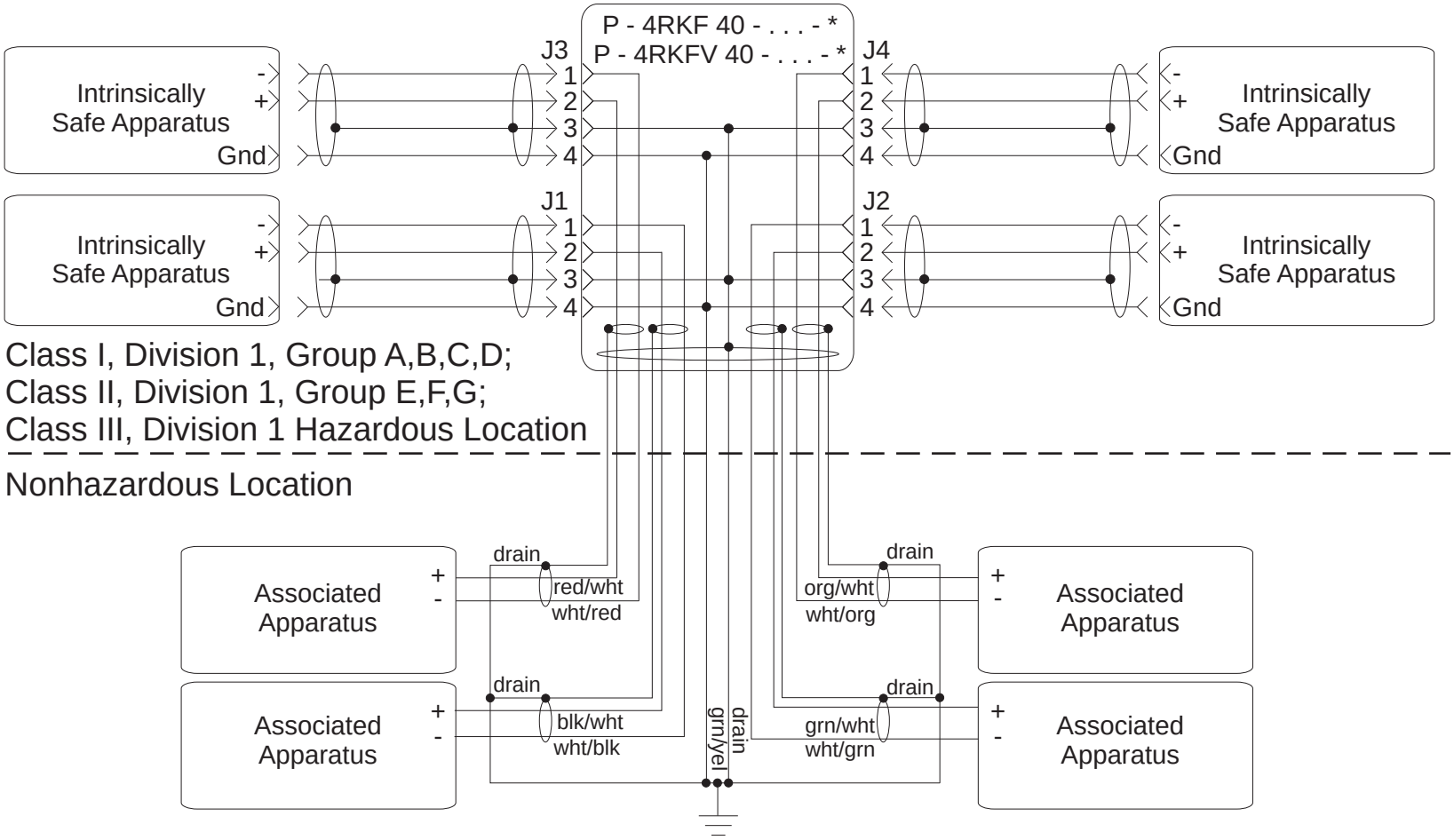

Intrinsically Safe Apparatus: Any FM approved device with Entity Concept parameters

$V_{max} \geq V_{oc}$ of the Associated Apparatus

$I_{max} \geq I_{sc}$ of the Associated Apparatus

$C_i + C_{cable} \leq C_a$ of the Associated Apparatus

$L_i + L_{cable} \leq L_a$ of the Associated Apparatus

$P_i \geq P_o$ of the Associated Apparatus

Associated Apparatus: Any FM approved device with Entity Concept parameters:

$V_{oc} \leq V_{max}$ of the Intrinsically Safe Apparatus <u>and</u> ≤ 30V

$I_{sc} \leq I_{max}$ of the Intrinsically Safe Apparatus <u>and</u> ≤ 600mA

$C_a \geq C_i$ of the Intrinsically Safe Apparatus + C_{cable}

$L_a \geq L_i$ of the Intrinsically Safe Apparatus + L_{cable}

$P_o \leq P_i$ of the Intrinsically Safe Apparatus <u>and</u> ≤ 4.5W

TURCK 3000 Campus Drive Minneapolis, MN 55441-2656	Drawing No. QCF-00147		Rev J
	Scale None	Sheet 41 of 54	

P-4RKF 40 - CS12, P - 4RKFV 40 - CSV12,
P - 4MBMA - 4 - CS12, P - 4MBMVA 40 - CSV12

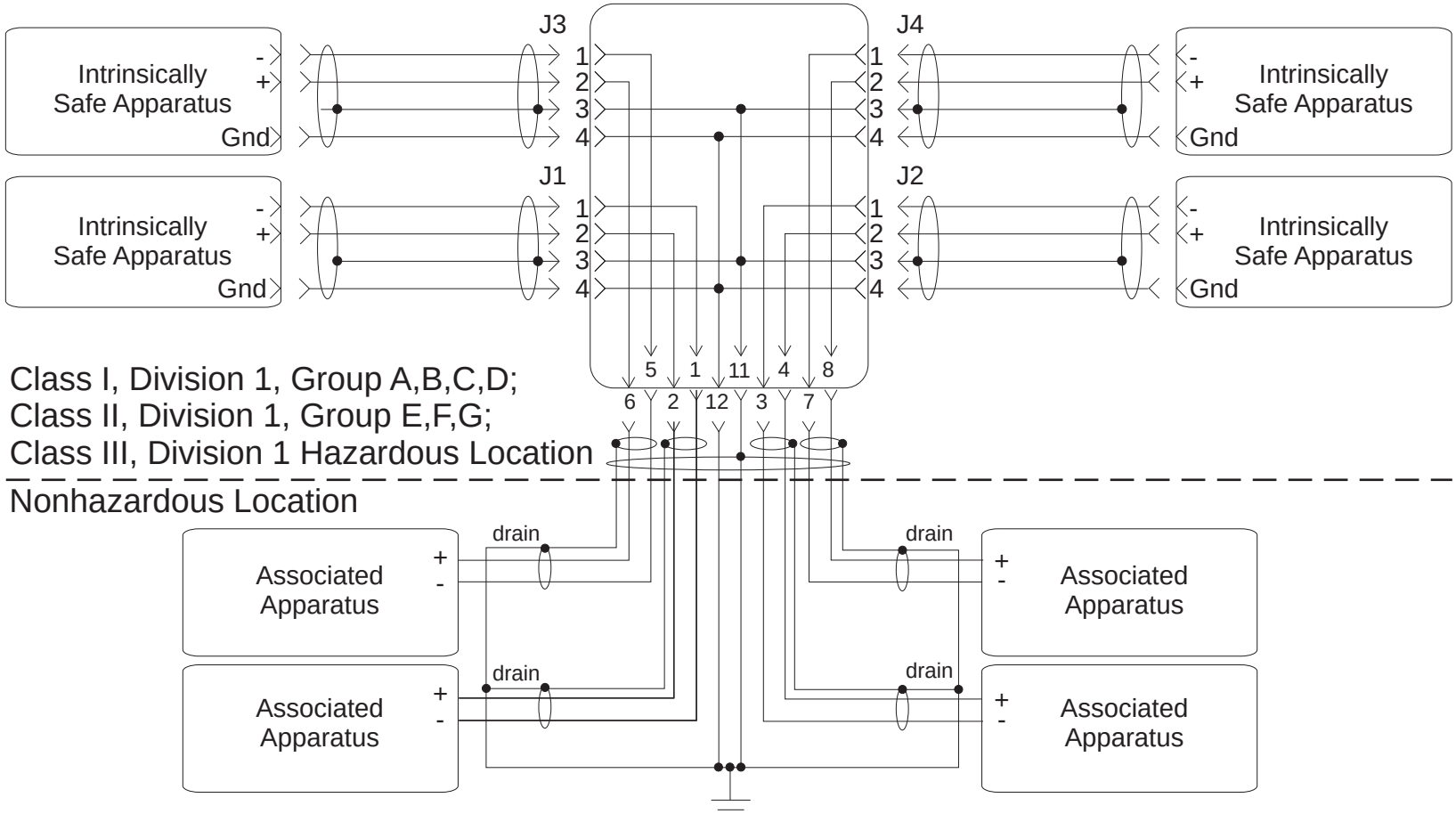

Intrinsically Safe Apparatus: Any FM approved device with Entity Concept parameters

$V_{max} \geq V_{oc}$ of the Associated Apparatus

$I_{max} \geq I_{sc}$ of the Associated Apparatus

$C_i + C_{cable} \leq C_a$ of the Associated Apparatus

$L_i + L_{cable} \leq L_a$ of the Associated Apparatus

$P_i \geq P_o$ of the Associated Apparatus

Associated Apparatus: Any FM approved device with Entity Concept parameters:

$V_{oc} \leq V_{max}$ of the Intrinsically Safe Apparatus <u>and</u> ≤ 30V

$I_{sc} \leq I_{max}$ of the Intrinsically Safe Apparatus <u>and</u> ≤ 600mA

$C_a \geq C_i$ of the Intrinsically Safe Apparatus + C_{cable}

$L_a \geq L_i$ of the Intrinsically Safe Apparatus + L_{cable}

$P_o \leq P_i$ of the Intrinsically Safe Apparatus <u>and</u> ≤ 4.5W

TURCK 3000 Campus Drive Minneapolis, MN 55441-2656	Drawing No. QCF-00147		Rev J
	Scale None	Sheet 42 of 54	

Intrinsically Safe Apparatus:
Any FM approved device with Entity Concept parameters:

$V_{max} \geq V_{oc}$ of the associated apparatus

$I_{max} \geq I_{sc}$ of the associated apparatus

$C_i + C_{cable} \leq C_a$ of the associated apparatus

$L_i + L_{cable} \leq L_a$ of the associated apparatus

$P_i \geq P_o$ of the associated apparatus

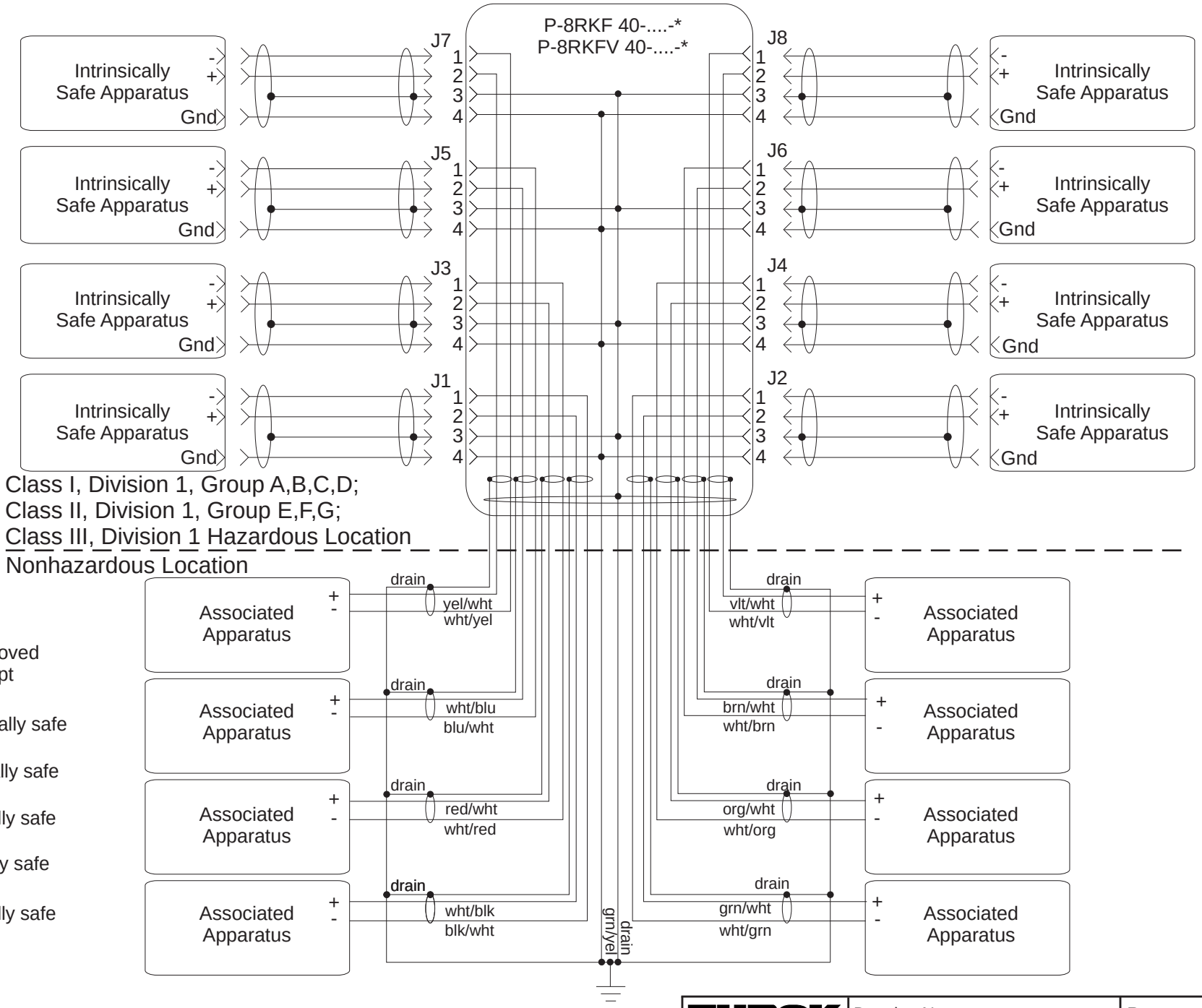

Associated Apparatus:
Any Factory Mutual approved device with Entity Concept parameters:

$V_{oc} \leq V_{max}$ of the intrinsically safe apparatus and $\leq$ 30V

$I_{sc} \leq I_{max}$ of the intrinsically safe aparatus and $\leq$ 600mA

$C_a \geq C_i$ of the intrinsically safe apparatus + C_{cable}

$L_a \geq L_i$ or the intrinsically safe apparatus + L_{cable}

$P_o \leq P_i$ of the intrinsically safe apparatus <u>and</u> < 4.5W

TURCK 3000 Campus Drive Minneapolis, MN 55441-2656	Drawing No. QCF-00147		Rev J
	Scale None	Sheet 43 of 54	

Intrinsically Safe Apparatus:
Any FM approved device with Entity Concept parameters:

$V_{max} \geq V_{oc}$ of the associated apparatus

$I_{max} \geq I_{sc}$ of the associated apparatus

$C_i + C_{cable} \leq C_a$ of the associated apparatus

$L_i + L_{cable} \leq L_a$ of the associated apparatus

$P_i \geq P_o$ of the associated apparatus

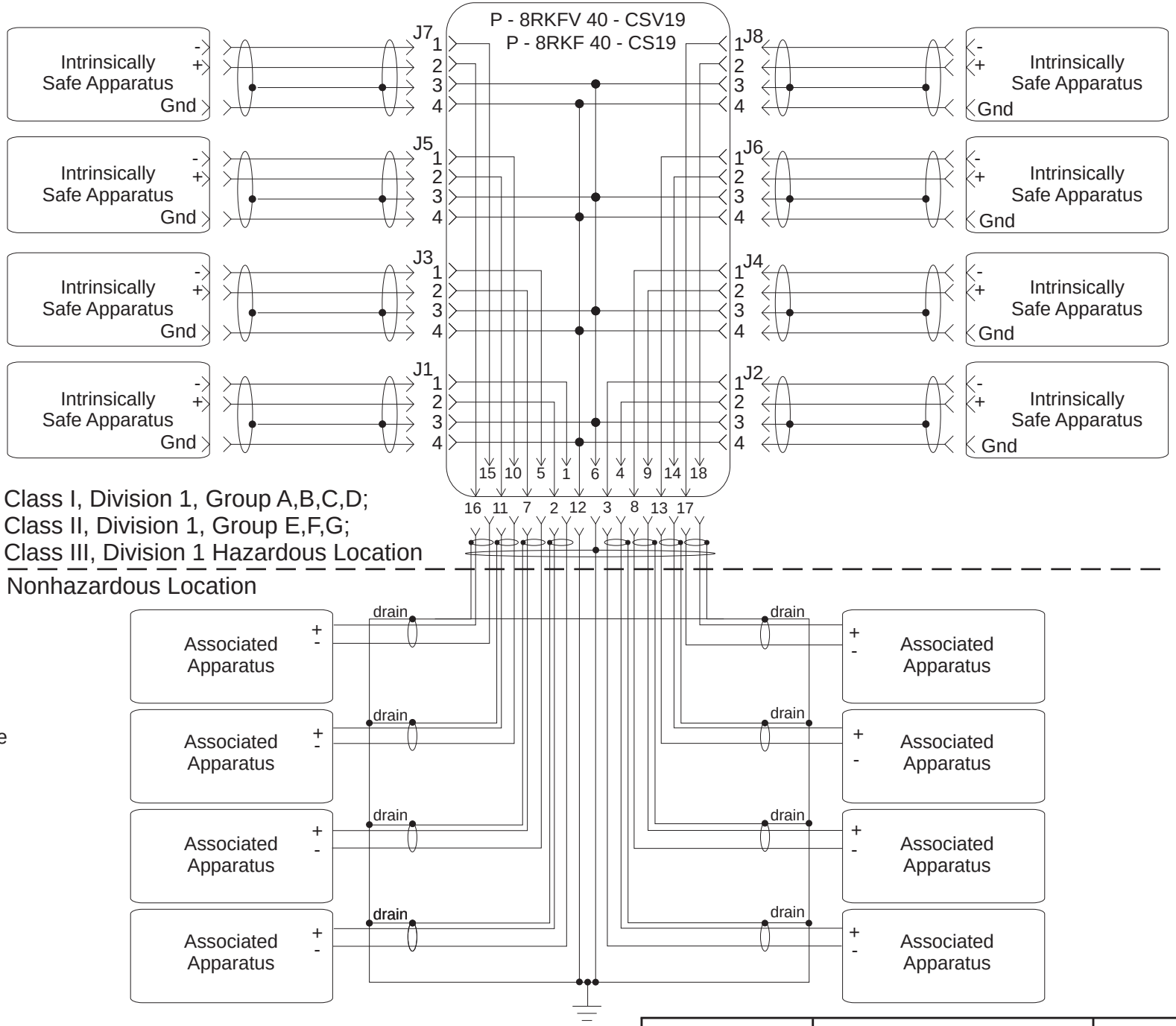

Associated Apparatus:
Any Factory Mutual approved device with Entity Concept parameters:

$V_{oc} \leq V_{max}$ of the intrinsically safe apparatus and $\leq$ 30V

$I_{sc} \leq I_{max}$ of the intrinsically safe aparatus and $\leq$ 600mA

$C_a \geq C_i$ of the intrinsically safe apparatus + C_{cable}

$L_a \geq L_i$ or the intrinsically safe apparatus + L_{cable}

$P_o \leq P_i$ of the intrinsically safe apparatus <u>and</u> < 4.5W

TURCK 3000 Campus Drive Minneapolis, MN 55441-2656	Drawing No. QCF-00147		Rev J
	Scale None	Sheet 44 of 54	

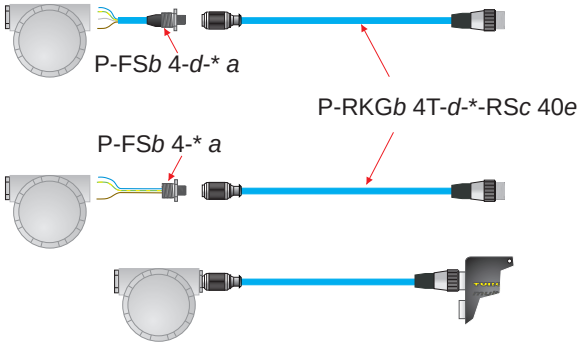

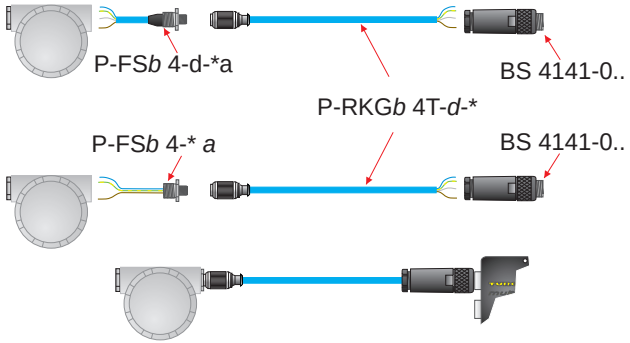

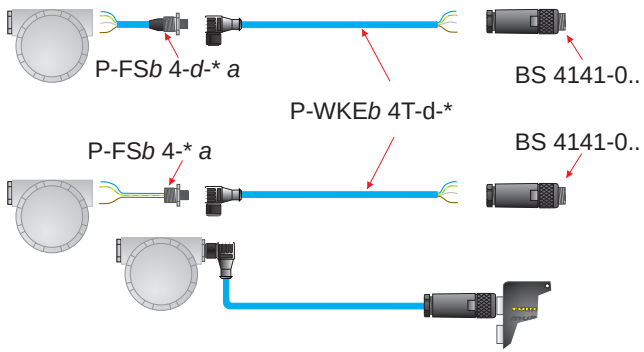

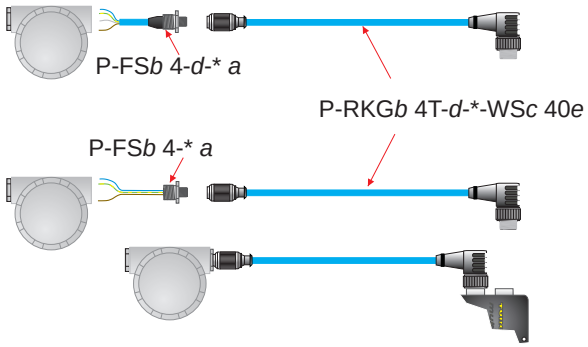

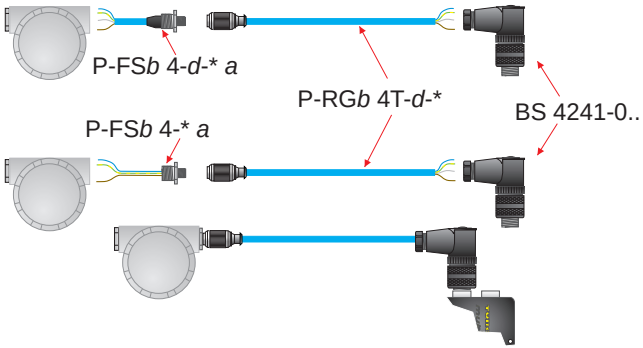

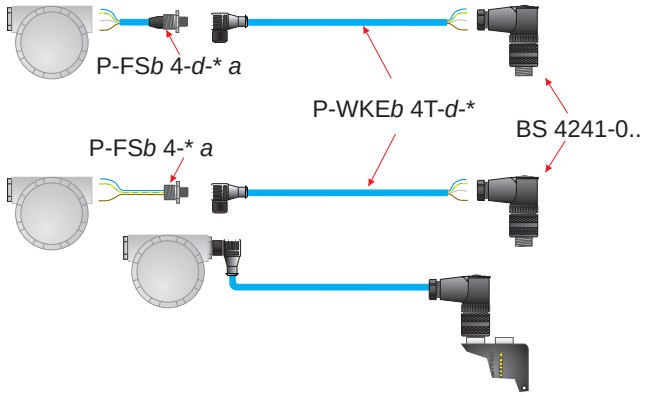

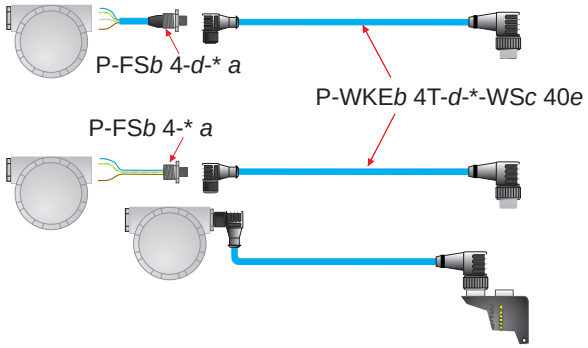

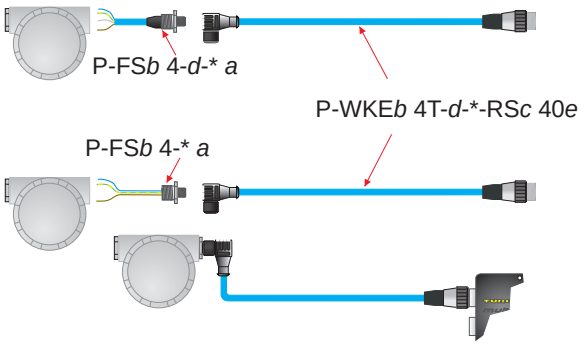

KEY

a = /14.5/NPT, /14.75/NPT, /M20, or blank

b = V or blank

c = M or V

d = 3- or 4-digit ITC or PLTC cable number

e = H or blank

= Intrinsically Safe Apparatus, FM approved for Class I, Division 1

= Turck multibox with *minifast* port connectors, part numbers identified on Sheets 29-32.

TURCK 3000 Campus Drive Minneapolis, MN 55441-2656	Drawing No. QCF-00147		Rev J
	Scale None	Sheet 45 of 54	

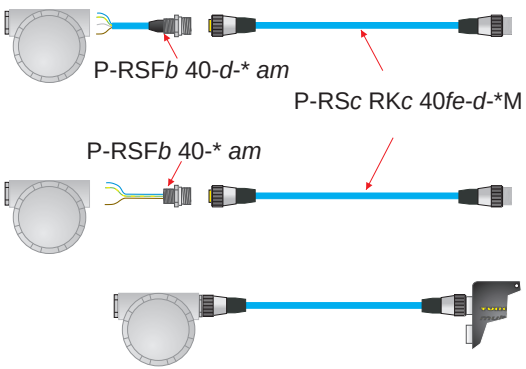

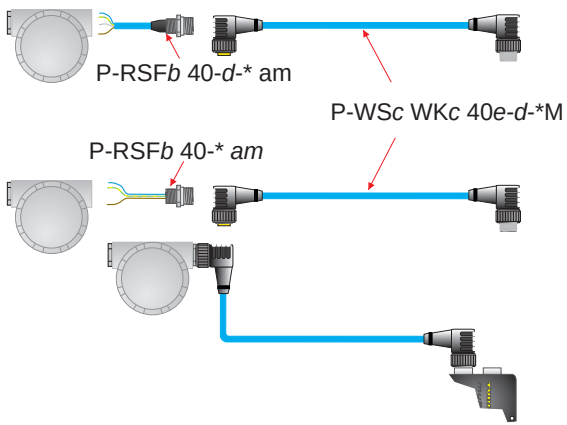

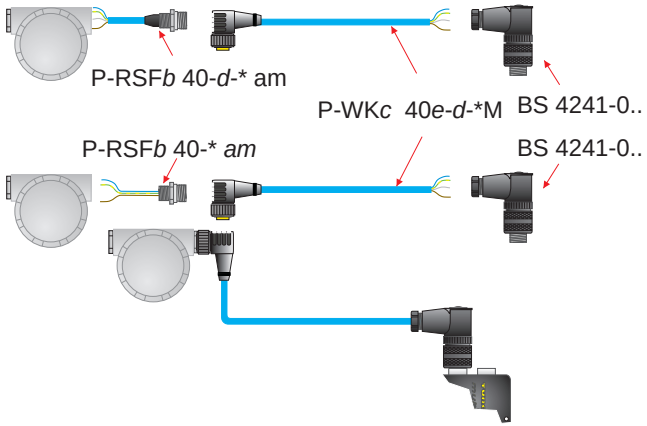

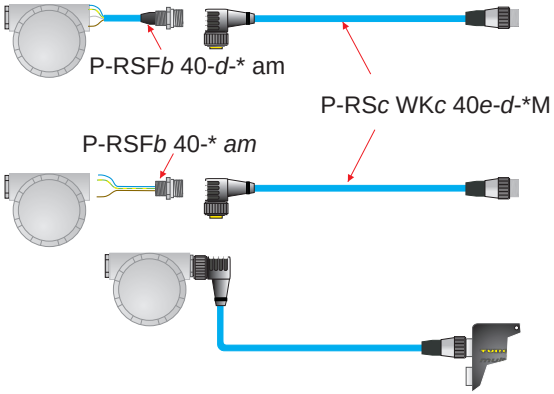

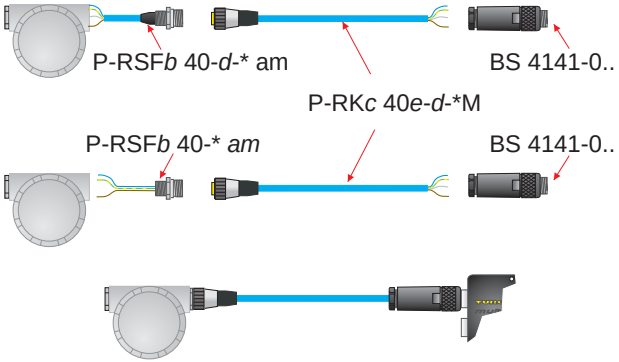

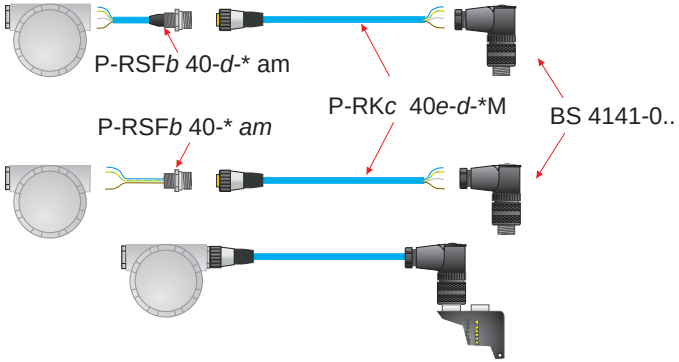

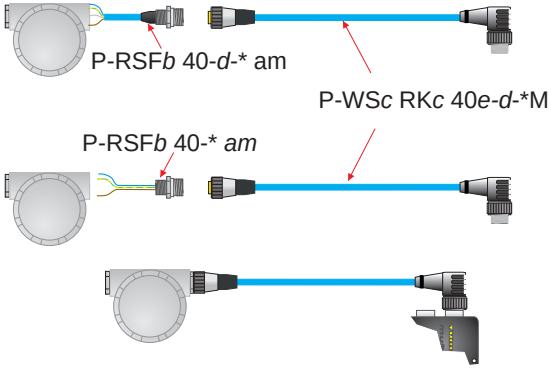

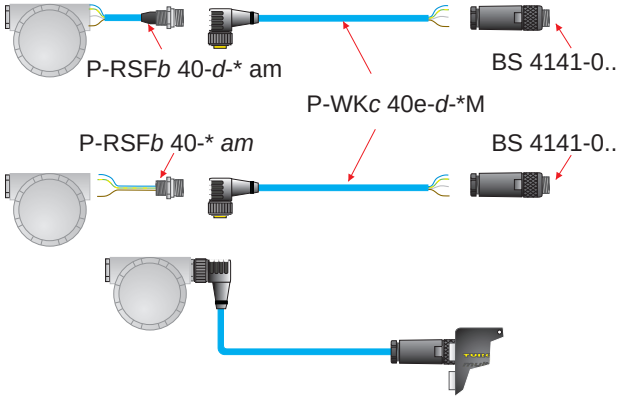

KEY

a = /14.5/NPT, /14.75/NPT, /M20, or blank

b = V or blank

c = M or V

d = 3- or 4-digit ITC or PLTC cable number

e = H or blank

f = A or blank

g = /S3256 or blank

= Intrinsically Safe Apparatus, FM approved for Class I, Division 1

= Turck multibox with *minifast* port connectors, part numbers identified on Sheets 29-32.

TURCK 3000 Campus Drive Minneapolis, MN 55441-2656	Drawing No. QCF-00147		Rev J
	Scale None	Sheet 46 of 54	

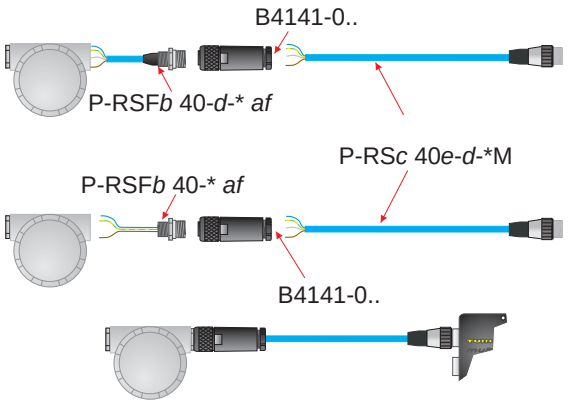

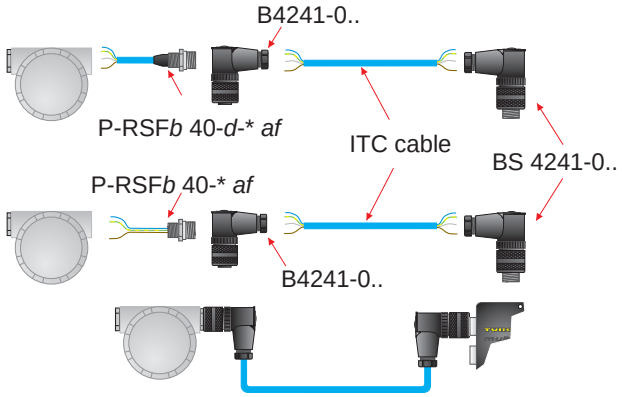

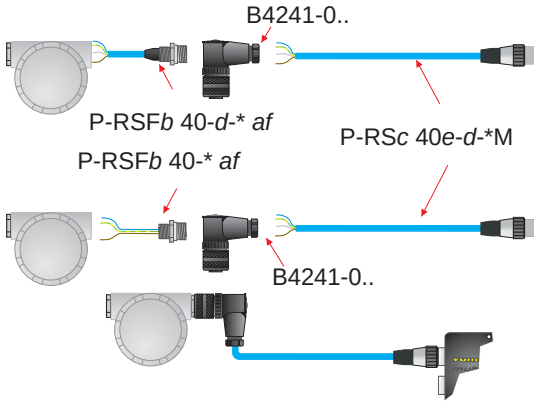

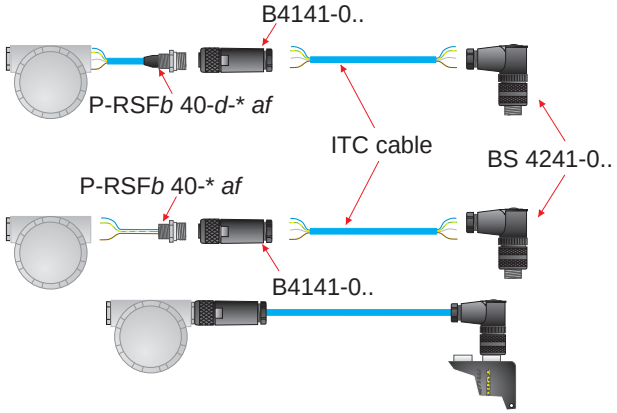

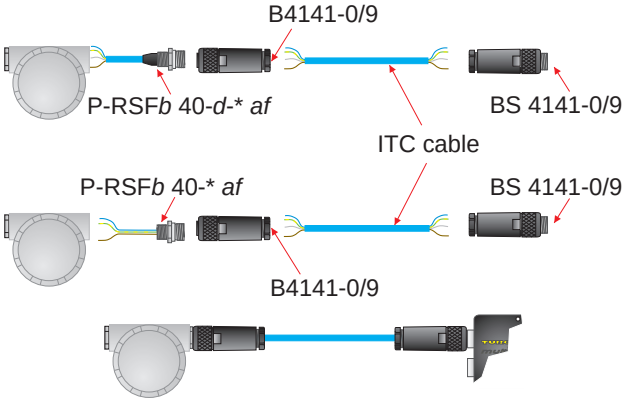

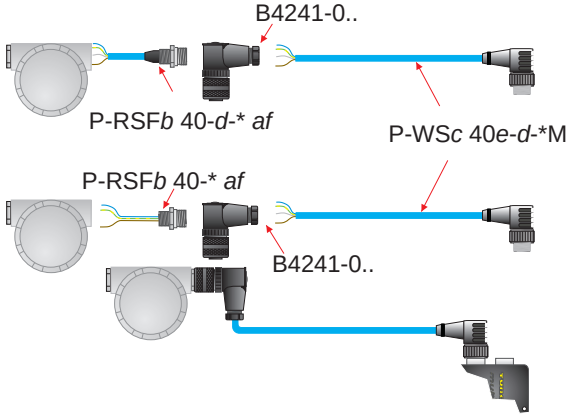

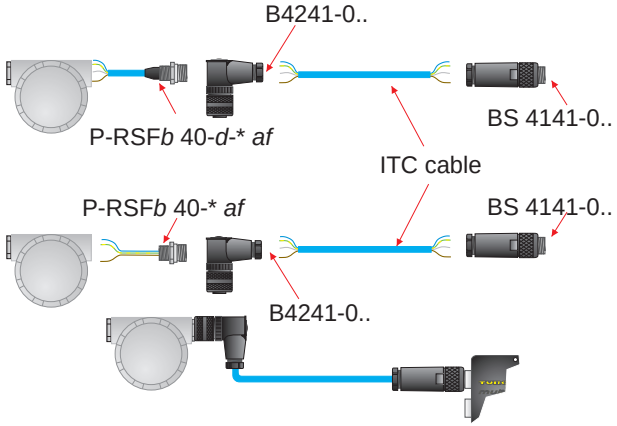

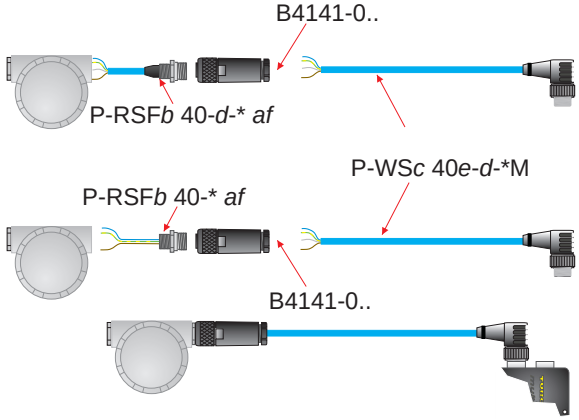

KEY

a = /14.5/NPT, /14.75/NPT, /M20, or blank

b = V or blank

c = M or V

d = 3- or 4-digit ITC or PLTC cable number

e = H or blank

f = /S3256 or blank

= Intrinsically Safe Apparatus, FM approved for Class I, Division 1

= Turck multibox with *minifast* port connectors, part numbers identified on Sheets 29-32.

TURCK 3000 Campus Drive Minneapolis, MN 55441-2656	Drawing No. QCF-00147		Rev J
	Scale None	Sheet 47 of 54	

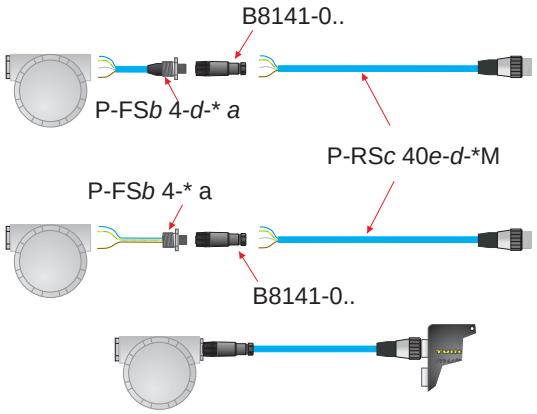

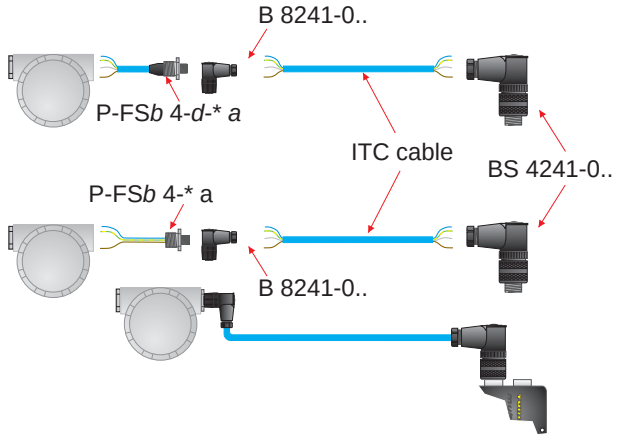

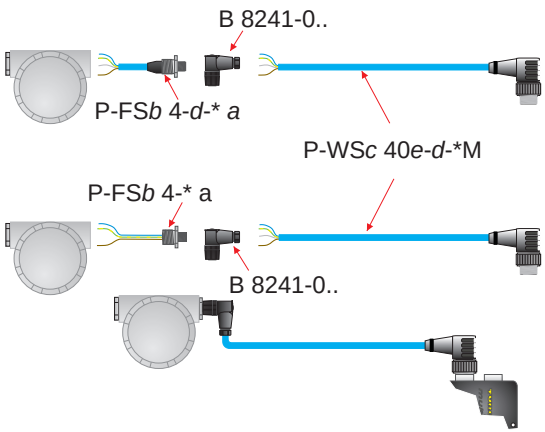

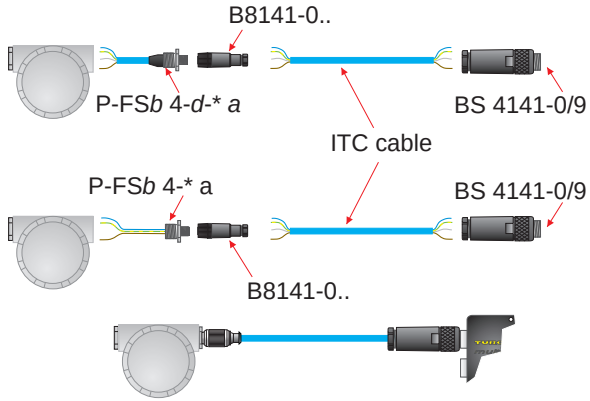

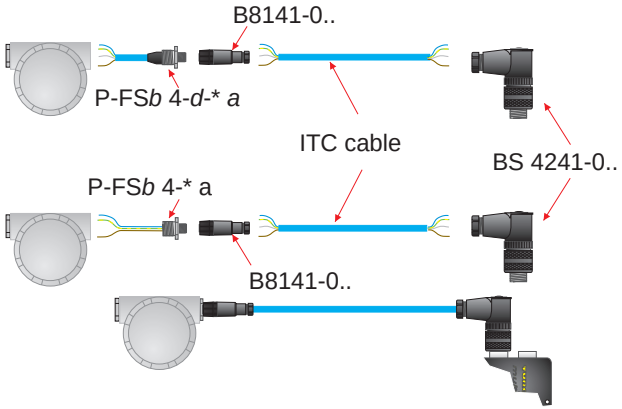

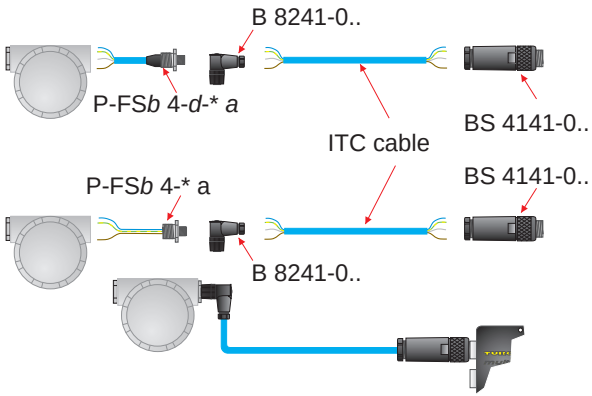

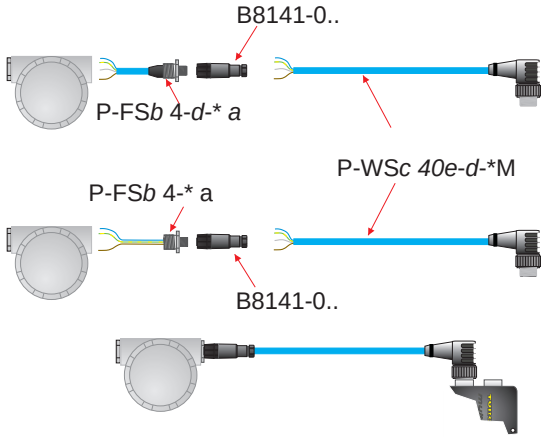

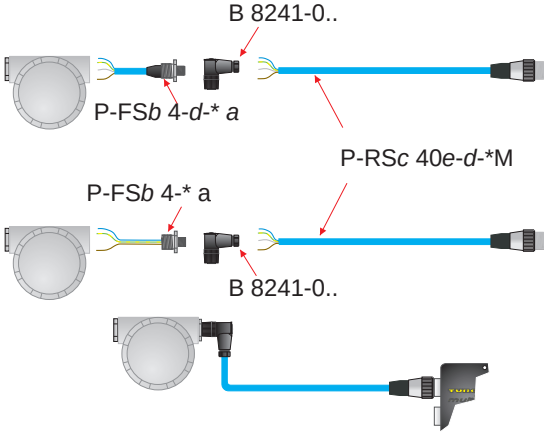

KEY

a = /14.5/NPT, /14.75/NPT, /M20, or blank
b = V or blank
c = M or V
d = 3- or 4-digit ITC or PLTC cable number
e = H or blank

= Intrinsically Safe Apparatus, FM approved for Class I, Division 1

= Turck multibox with *minifast* port connectors, part numbers identified on Sheets 29-32.

TURCK 3000 Campus Drive Minneapolis, MN 55441-2656	Drawing No. QCF-00147		Rev J
	Scale None	Sheet 48 of 54	

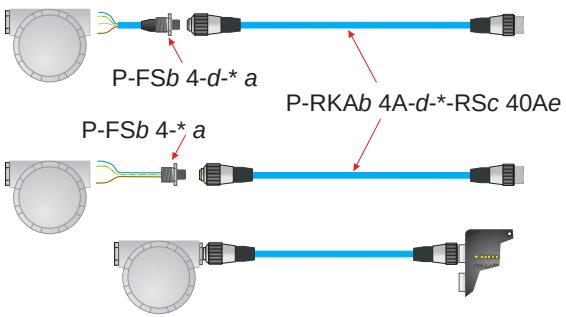

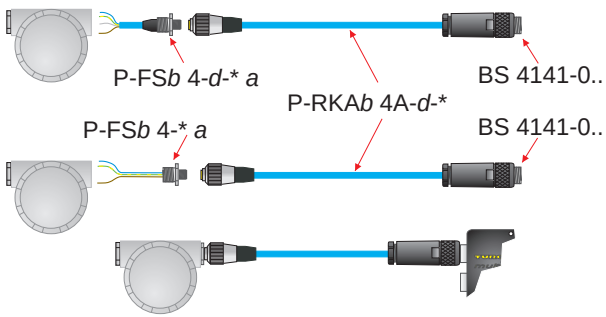

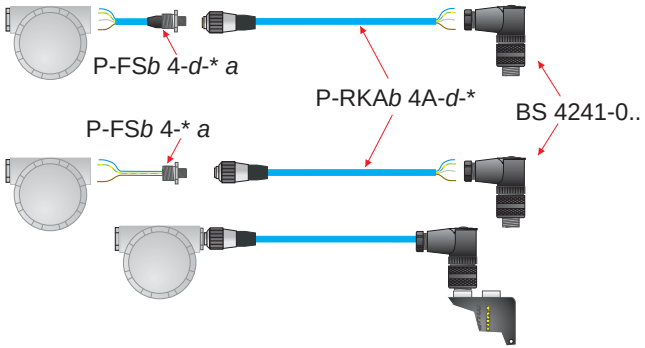

KEY

a = /14.5/NPT, /14.75/NPT, /M20, or blank

b = V or blank

c = M or V

d = 3- or 4-digit ITC or PLTC cable number

e = H or blank

= Intrinsically Safe Apparatus, FM approved for Class I, Division 1

= Turck multibox with *minifast* port connectors, part numbers identified on Sheets 29-32.

TURCK 3000 Campus Drive Minneapolis, MN 55441-2656	Drawing No. QCF-00147		Rev J
	Scale None	Sheet 49 of 54	

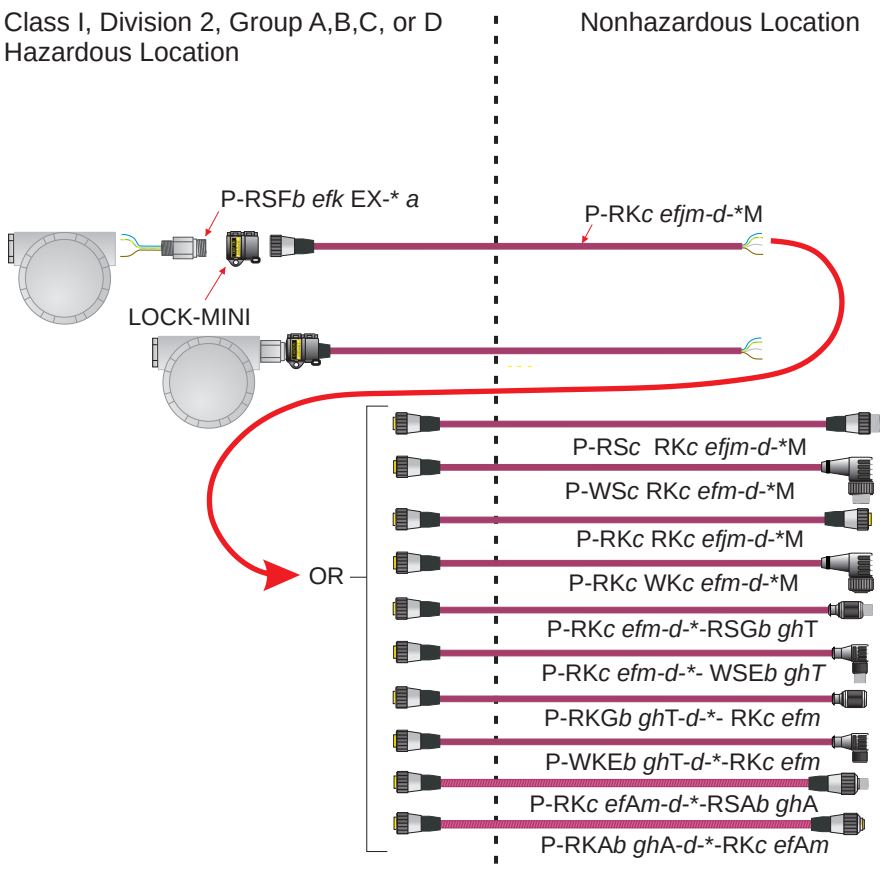

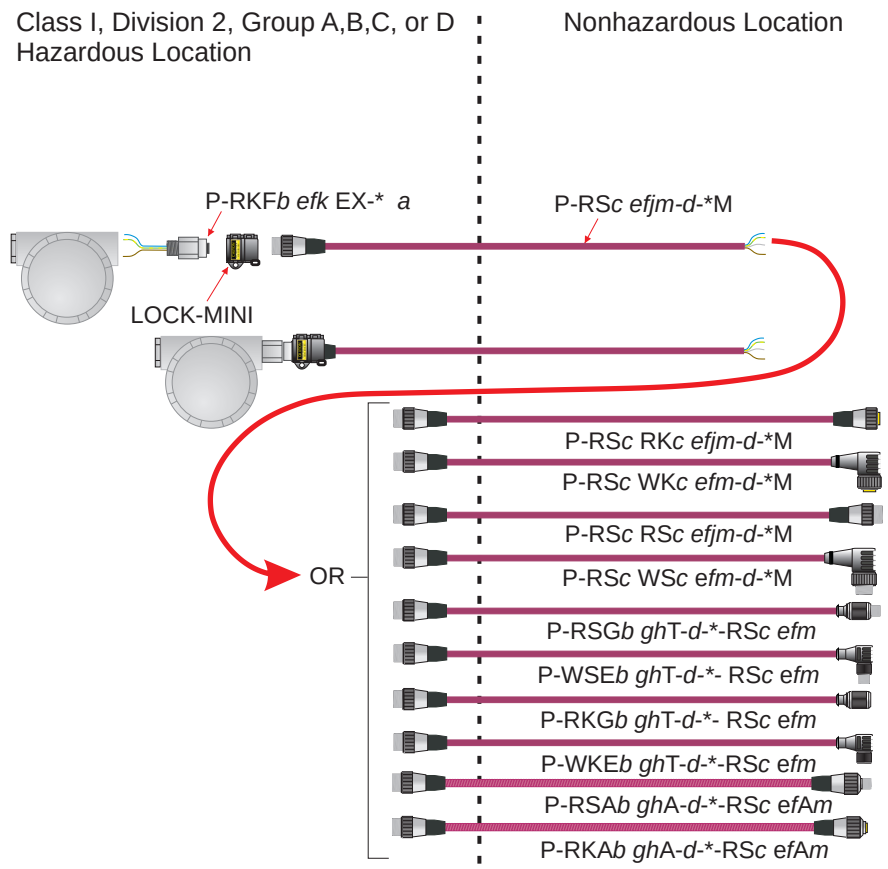

Notes:

1. Key: *a* = /14.5/NPT or /14.75/NPT *b* = V or blank *c* = M or V *d* = 3- or 4-digit ITC or PLTC cable number *e* = 2, 3, 4, 5, or 6
   f = 0, 1, 2, 3, . . . 9, 01, 02, 03, . . . 99 *g* = 4 or 5 *h* = .1, .2, .3, ...99, or blank *j* = A or blank *k* = D or blank *m* = H or blank

   = Nonincendive equipment, FM approved for installation in Class I, Division 2; or FM approved explosionproof equipment installed in Division 2.

2. The installation must be in accordance with the National Electrical Code, ANSI/NFPA 70. Specific requirements for the installation of PLTC rated and ITC rated cable may be found in Article 501, Article 725 and Article 727.

3. *lokfast* guards on quick-disconnects require a tool to disconnect, rendering the connection not normally arcing.

4. The molded construction of the cordset and the gas/vaportight continuous sheath of the cable meet the requirements of the NEC, Article 501, for cable seals in Division 2.

TURCK 3000 Campus Drive Minneapolis, MN 55441-2656	Drawing No. QCF-00147		Rev J
	Scale None	Sheet 50 of 54	

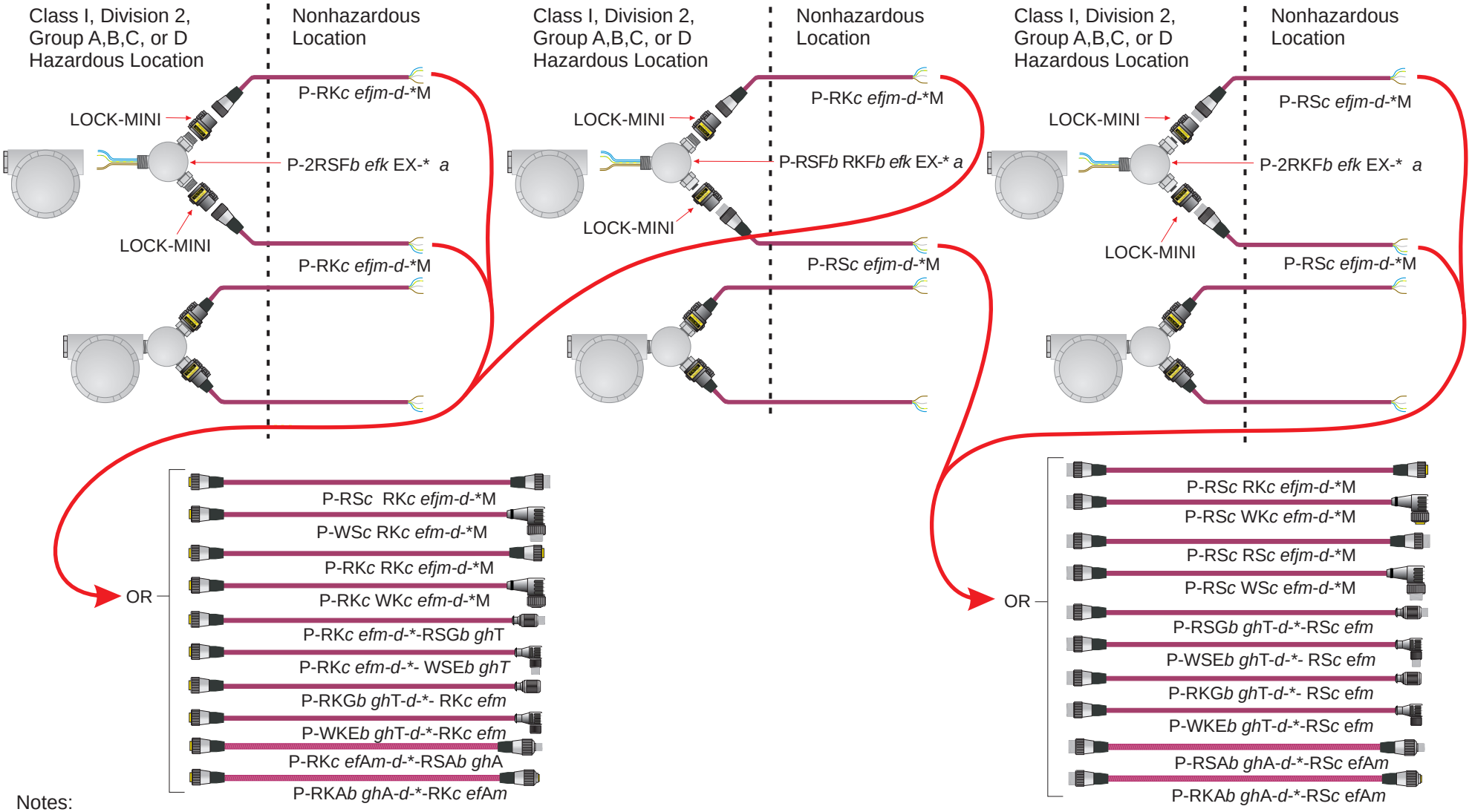

Notes:

1. Key: *a* = /14.5/NPT, /14.75/NPT or /M20 *b* = V or blank *c* = M or V *d* = 3- or 4-digit ITC or PLTC cable number *e* = 2, 3, 4, 5, or 6
f = 0, 1, 2, 3, . . . 9, 01, 02, 03, . . . 99 *g* = 4 or 5 *h* = .1, .2, .3, ...99, or blank *j* = A or blank *k* =B or blank *m* = H or blank

   = Nonincendive equipment, FM approved for installation in Class I, Division 2; or FM approved explosionproof equipment installed in Division 2.

2. The installation must be in accordance with the National Electrical Code, ANSI/NFPA 70. Specific requirements for the installation of PLTC rated and ITC rated cable may be found in Article 501, Article 725 and Article 727.

3. *lokfast* guards on quick-disconnects require a tool to disconnect, rendering the connection not normally arcing.

4. The molded construction of the cordset and the gas/vaportight continuous sheath of the cable meet the requirements of the NEC, Article 501, for cable seals in Division 2.

TURCK 3000 Campus Drive Minneapolis, MN 55441-2656	Drawing No. QCF-00147		Rev J
	Scale None	Sheet 51 of 54	

Class I, Division 1, Group A,B,C, or D
Hazardous Location

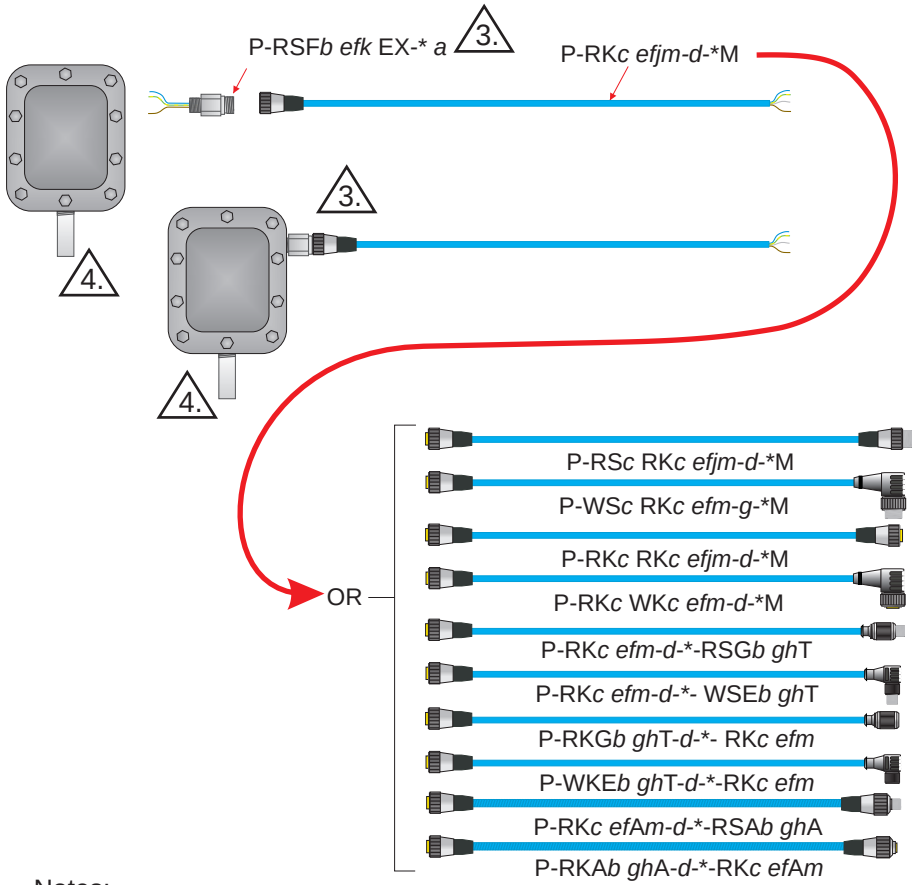

Class I, Division 1, Group A,B,C, or D
Hazardous Location

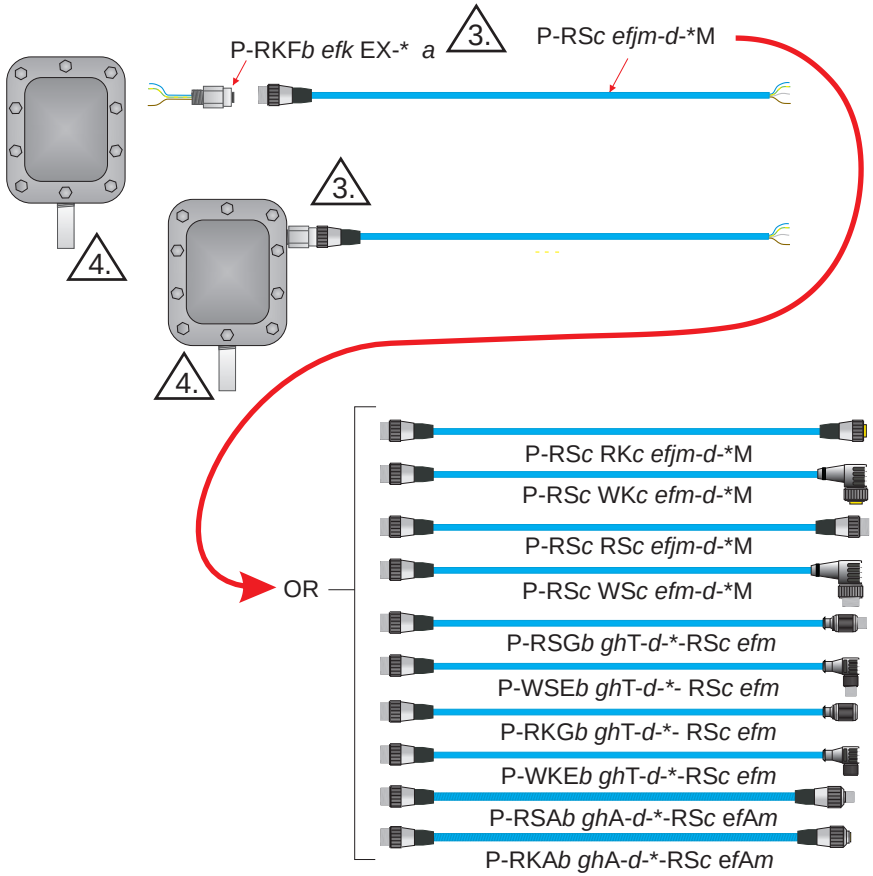

Notes:

1. Key: *a* = /14.5/NP or /14.75/NPT *b* = V or blank *c* = M or V *d* = 3- or 4-digit ITC or PLTC cable number *e* = 2, 3, 4, 5, or 6
f = 0, 1, 2, 3, . . . 9, 01, 02, 03, . . . 99 *g* = 4 or 5 *h* = .1, .2, .3, ...99, or blank *j* = A or blank *k* = D or blank *m* = H or blank

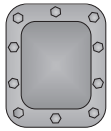

= FM approved explosionproof equipment with an FM approved intrinsically safe circuit.

2. The installation must be in accordance with the National Electrical Code, ANSI/NFPA 70 and the control drawing of the FM approved equipment.

3. The P-RSF*b efk* EX-*-*a* or P-RKF*b-efk* EX-*-*a* receptacle maintains the explosionproof protection of the FM approved equipment. The circuit must be intrinsically safe for the specific area classification.

4. Nonintrinsically safe circuits must be installed using Class I, Division 1 wiring methods..

5. The molded construction of the cordset and the gas/vaportight continuous sheath of the cable meet the requirements of the NEC, Article 501 for cable seals in Class I, Divisions 1 and 2.

TURCK 3000 Campus Drive Minneapolis, MN 55441-2656	Drawing No. QCF-00147		Rev J
	Scale None	Sheet 52 of 54	

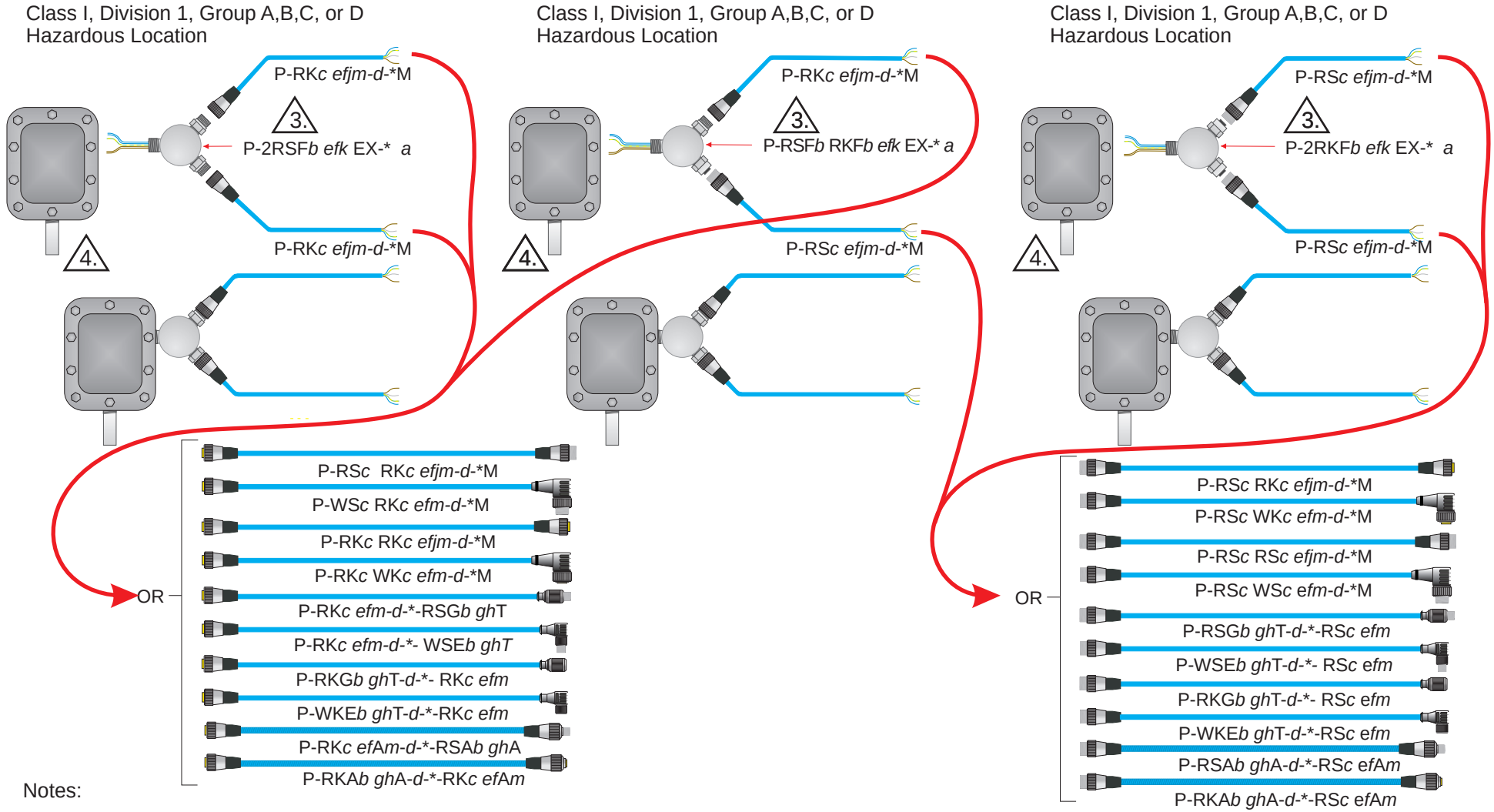

Notes:

1. Key: *a* = /14.5/NP, /14.75/NPT or /M20 *b* = V or blank *c* = M or V *d* = 3- or 4-digit ITC or PLTC cable number *e* = 2, 3, 4, 5, or 6
f = 0, 1, 2, 3, . . . 9, 01, 02, 03, . . . 99 *g* = 4 or 5 *h* = .1, .2, .3, ...99, or blank *j* = A or blank *k* = B or blank *m* = H or blank

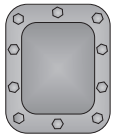

= FM approved explosionproof equipment with an FM approved intrinsically safe circuit.

2. The installation must be in accordance with the National Electrical Code, ANSI/NFPA 70 and the control drawing of the FM approved equipment.

3. The P-2RSF*b efk* EX-*-*a,* P-2RKF*b-efk* EX-*-*a,* or P-RSFb RKFb-efk EX-*-a receptacle maintains the explosionproof protection of the FM approved equipment. The circuit must be intrinsically safe for the specific area classification.

4. Nonintrinsically safe circuits must be installed using Class I, Division 1 wiring methods..

5. The molded construction of the cordset and the gas/vaportight continuous sheath of the cable meet the requirements of the NEC, Article 501, for cable seals in Class I, Divisions 1 and 2.

TURCK 3000 Campus Drive Minneapolis, MN 55441-2656	Drawing No. QCF-00147		Rev J
	Scale None	Sheet 53 of 54	

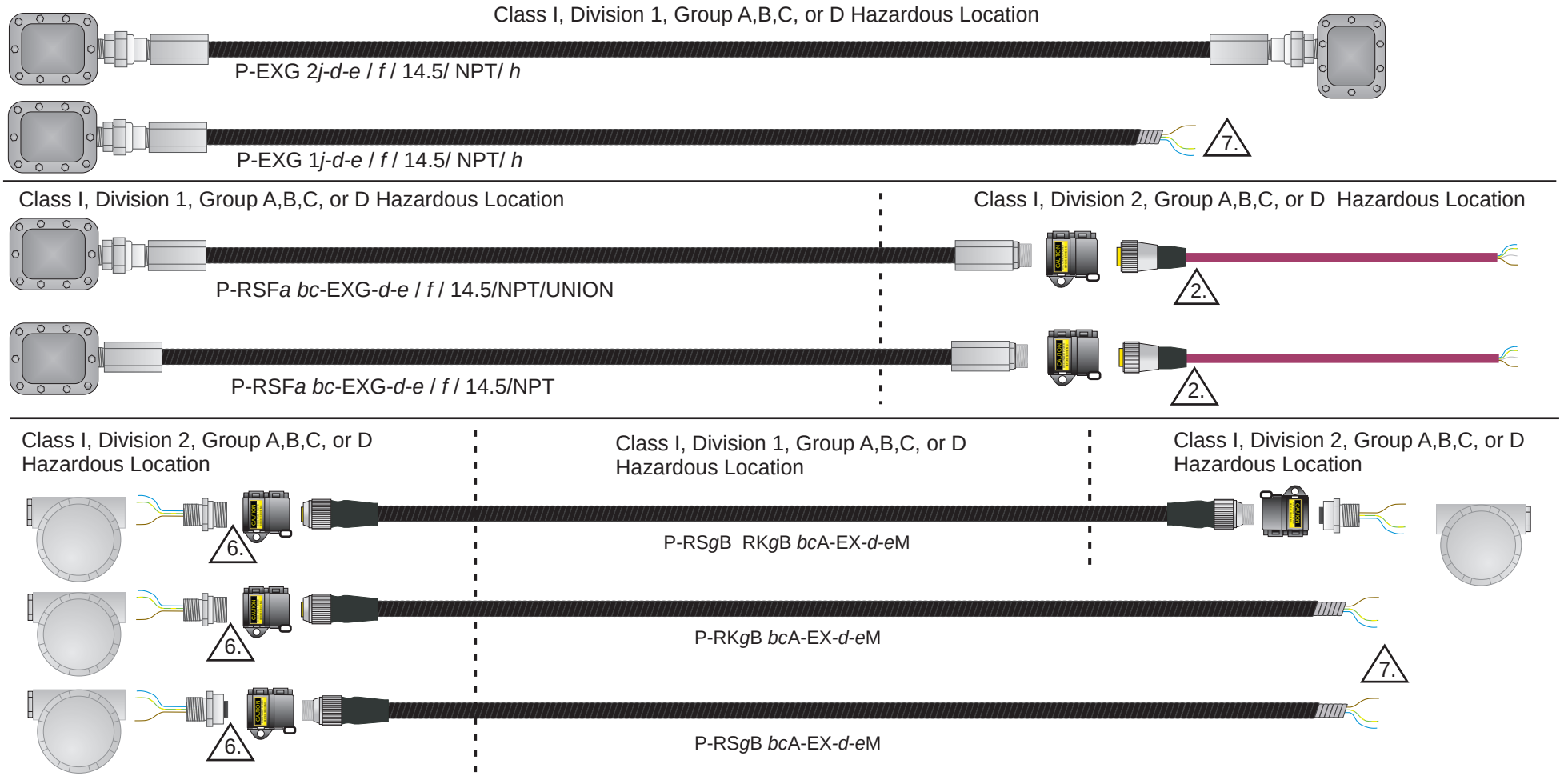

Notes:

1. Key: *a* = V or blank *b* = 2, 3, 4, 5 or 6 *c* = 0, 1, 2, 3, . . . 9, 01, 02, 03, . . . 99 *d* = 4-digit MC-HL cable number *e* = cable length in meters
f = lead length in meters *g* = M or V *h* = UNION or blank *j* = Configuration code A1, A2, A3, . . . Z9 or blank

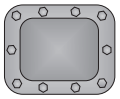 = FM approved explosionproof equipment

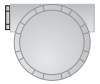 = Nonincendive equipment, FM approved for installation in Class I, Division 2

2. *minifast* cords listed and installed as shown on Sheets 10 and 11.
3. The installation must be in accordance with the National Electrical Code, ANSI/NFPA 70 and the control drawing of the FM approved equipment.
4. The P-RSF*a* *bc*-EXG-*d*-*M/14.5/NPT receptacle maintains the explosionproof protection of the FM approved explosionproof equipment. The *minifast* connector end of the receptacle must be installed in a Class I, Division 2 or nonhazardous location.
5. The construction of the cordset and the gas/vaportight continuous sheath of the cable meet the requirements of the NEC, Article 501, Article 501, for cable seals in Class I, Divisions 1 and 2.
6. Mating receptacles and lokfast guards per sheet 11.
7. Terminated using methods appropriate for MC-HL cable in the specific hazardous location.

TURCK 3000 Campus Drive Minneapolis, MN 55441-2656	Drawing No. QCF-00147		Rev J
	Scale None	Sheet 54 of 54	