# FM Approved JBBS Fieldbus Junctions

FM APPROVED


Installation in Class I, Division 2, Group A, B, C, or D with approved nonincendive fieldbus participants without Nonincendive Field Wiring parameters. . . . Sheet 2

Installation in Class I, Division 2, Group C or D with approved nonincendive fieldbus participants with Nonincendive Field Wiring parameters. . . . . Sheet 3

Installation in Class I, Division 1, Group A, B, C, or D with I/S fieldbus participants with Entity Concept parameters. . . . . Sheet 4

Installation in Class I, Division 1, Group A, B, C, or D with I/S fieldbus participants with FISCO parameters. . . . . Sheet 5

Installation in Class I, Zone 0, Group IIC, IIB or IIA with I/S fieldbus participants with Entity Concept parameters. . . . . Sheet 6

Installation in Class I, Zone 0, Group IIC, IIB or IIA with I/S fieldbus participants with FISCO parameters. . . . . Sheet 7


Notes:

1. JTBS and JBBS junction bricks are designed to be connected using the InterlinkBT cordsets referenced in Note 2. These cordsets are constructed using ITC or PLTC cables to facillitate installation in Class I. Division 2 when the pertinent requirements of the NEC for installation of these cable types are observed. The receptacles referenced in Note 3 facilitate connection to other fieldbus participants. See sheets 2–7 for requirements specific to each type of installation listed above.

2. Cordsets

   ***minifast®*** cordsets

   Single–ended cords

   Rab cd - eM
   Wab cd - eM

   Extension cords

   Rab Rab cd - eM  RSb WKb cd - eM
   RKb WKb cd - eM  Wab Wab cd - eM
   RSb WSb cd - eM  WSb RKb cd - eM

   a = Connector gender K, or S
   b = Coupling nut material M, or V
   c = Bus standard 48*, 49*, or 57*
   d = Cable spec 0, 0B, 11, 2A, 2BA, 21A, 22, 3, 3B, 3BA, 3BK, 3□, 6, 7, 8, or 9
   e = Cable length in meters

   ***eurofast®*** cordsets

   Single–ended cords

   Rabc de - fM
   Wabc de- fM

   Extension cords

   Rabc Rabc de - fM  RSbc WKbc de - fM
   RKbc WKbc de - fM  Wabc Wabc de - fM
   RSbc WSbc de - fM  WSbc RKbc de - fM

   a = Connector gender K, or S
   b = Plug body C, E, G, or blank
   c = Coupling nut material K, V, or blank
   d = Bus standard 48, 49*, or 57*
   e = Cable spec 0, 0B, 11, 2A, 2BA, 21A, 22, 3, 3B, 3BA, 3BK, 3□, 6, 7, 8, or 9
   f = Cable length in meters

3. Receptacles

   ***minifast®*** receptacles

   RSFa bc - dM/ e
   RKFa bc - dM/ e

   ***eurofast®*** receptacles

   FSa bc - dM/ e
   FKa bc - dM/ e

   a = Housing Material V or blank
   b = Bus standard 48, 49, or 57
   c = Cable/lead type T, 0, or blank
   d = Cable/lead length in meters
   e = Thread 14.5, 14.75, M20, or blank

| Rev | Description | Drft | Date |
|---|---|---|---|
| A | Release | BVL | 4/26/06 |

| | |
|---|---|
| Drawing No.: NI–2.406 | TURCK 3000 Campus Drive Plymouth, MN 55441 Phone: (763) 553–7300 |
| Title: Control Drawing for FM Approved JBBS Fieldbus Junctions | |
| Scale: None | Sheet: 1 of 7 |

# FM Approved JBBS Fieldbus Junctions

## Nonincendive Equipment Junctions, Trunk-line, and Spurs

FM APPROVED

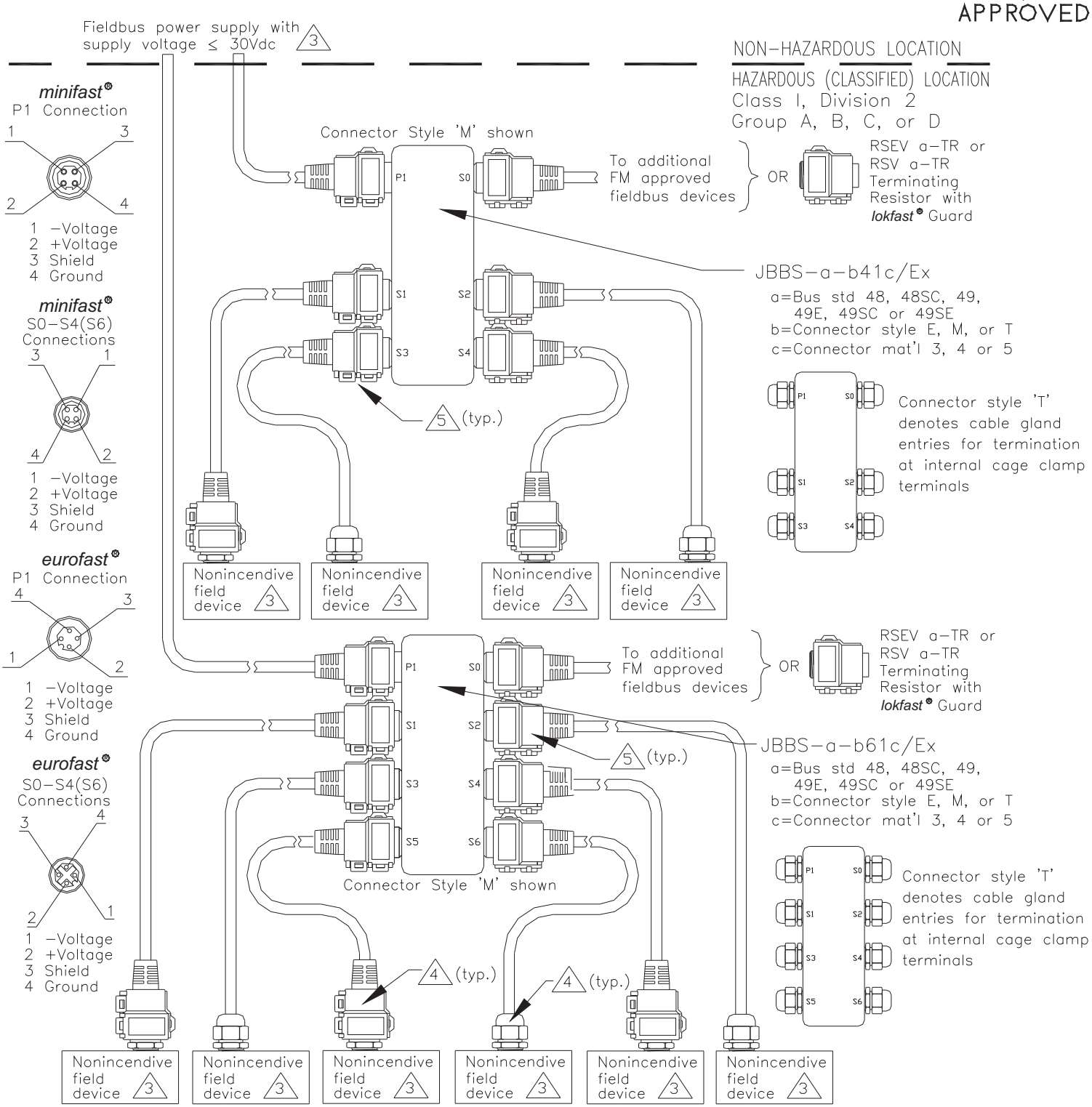


1. Wiring methods must be in accordance with Class I, Division 2 wiring practices per the National Electrical Code (NEC), ANSI/NFPA 70.
2. All connecting cords must be constructed with ITC and/or PLTC rated cable and be one of the types identified on Sheet 1, Note 2. They may be extension cordsets or single-ended cordsets (see Note 4).
3. Field devices must be FM approved for use in Class I, Division 2 hazardous (classified) locations and be rated for the fieldbus supply voltage. See Sheet 3 for installation with Nonincendive equipment with Nonincendive Field Wiring parameters.
4. Connection at the field device may be made using a Device Gland Receptacle indicated on Sheet 1, Note 3, or it may be made using entry fittings suitable for Class I, Division 2 and connected to internal terminals.
5. All connectors and terminating resistors must be secured using the appropriate *lokfast*® guard, as follows:
   - for *eurofast*® connectors, use SHIELD-EURO
   - for *minifast*® connectors, use SHIELD-MINI

| Rev | Description | Drft | Date | | |
|---|---|---|---|---|---|
| A | Release | BVL | 4/26/06 | Drawing No.: NI-2.406 | |
| | | | | Scale: NONE | Sheet 2 of 7 |

# FM Approved JBBS Fieldbus Junctions

## Nonincendive Equipment Junctions and Trunk-line with Nonincendive Field Wiring Circuit Spurs

FM APPROVED

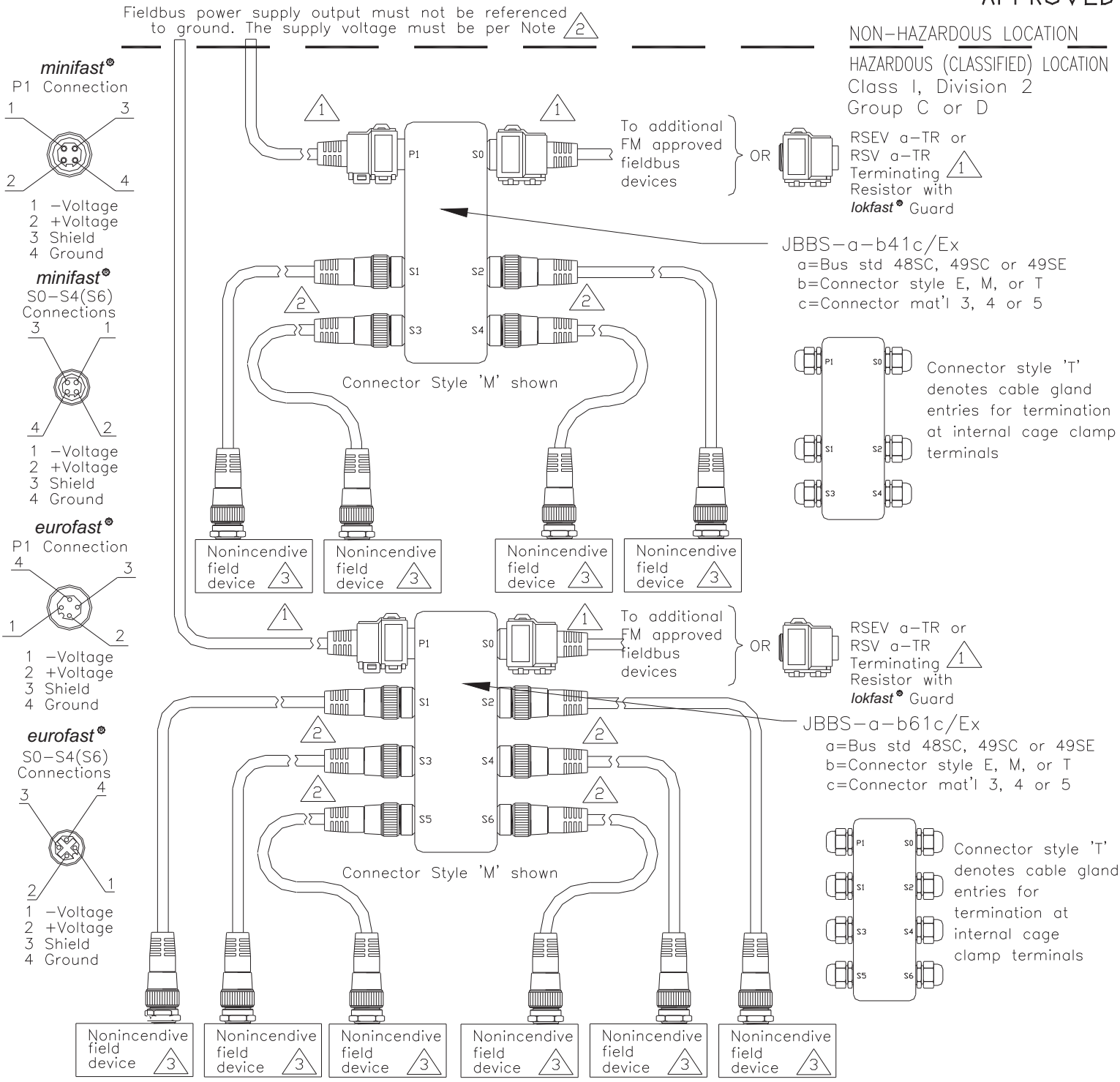


1. The trunk line (P1 − S0) must be installed using a Class I, Division 2 wiring method per the National Electrical Code (NEC), ANSI/NFPA 70. The cables identified on Sheet 1, Note 2, are ITC and/or PLTC rated and may be used for this purpose when installed per the pertinent requirements of the NEC. Connectors and terminating resistors in the trunk line must be secured using appropriate *lokfast®* guards. Use SHIELD−EURO guards with *eurofast®* connectors; use SHIELD−MINI guards with *minifast®* connectors.

2. Installed as shown above, the JBBS junctions are Associated Nonincendive Field Wiring Apparatus. The spur circuits S1−S4 (top) and S1−S6 (bottom) are Nonincendive Field Wiring circuits with the following Nonincendive Field Wiring parameters with rectangular output characteristic:

   $V_{oc}$ = The supply voltage from the fieldbus power supply, which must not be > 30V.
   When $V_{oc} \leq 28V$, $I_{sc}$ = 63mA, $C_a$ = 0.1uF, $L_a$ = 1.0mH. When $V_{oc} \leq 30V$, $I_{sc}$ = 63mA, $C_a$ = 0.06uF, $L_a$ = 1.0mH.

   The spur circuits may thus be installed using any NEC wiring method suitable for equivalent non−hazardous locations.

3. Field devices must be FM approved Nonincendive Field Wiring Apparatus with Nonincendive Field Wiring parameters as follows:
   $V_{max} \geq$ The supply voltage from the fieldbus power supply; $I_{max} \geq 63mA$; $C_i + C_{cable} \leq 0.1uF$; $L_i + L_{cable} \leq 1.0mH$
   See Sheet 2 for installation with Nonincendive equipment without Nonincendive Field Wiring parameters.

| | | | | | |
|---|---|---|---|---|---|
| A | Release | BVL | 4/26/06 | Drawing No.: NI-2.406 | |
| Rev | Description | Drft | Date | Scale: NONE | Sheet 3 of 7 |

# Intrinsically Safe for Division 1 With Entity Concept Parameters

FM Approved Associated Apparatus
With Entity 1 Parameters:
$V_{oc}$ or $V_t \leq$ 24V, $I_{sc}$ or $I_t \leq$ 250mA, $P_o \leq$ 2.56W
$C_a \geq \Sigma C_i + C_{cable}$ $L_a \geq \Sigma L_i + L_{cable}$

NON-HAZARDOUS LOCATION

HAZARDOUS (CLASSIFIED) LOCATION:
Class I, Division 1, Group A,B,C or D

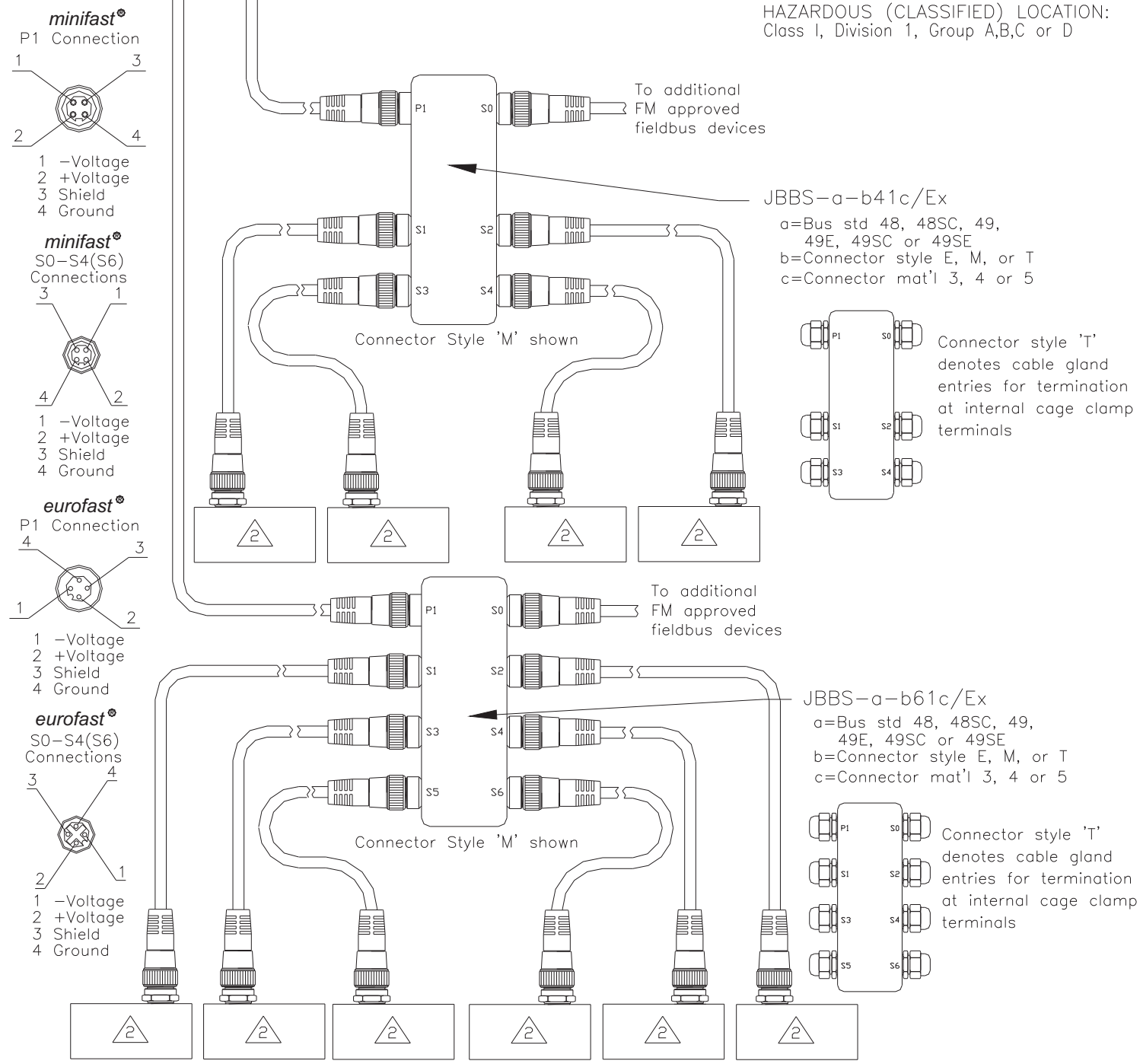


| Entity Parameters for Model: | Terminal 2 | $V_{max}$ (V) | $I_{max}$ (mA) | $P_i$ (W) | $C_i$ (nF) | $L_i$ (mH) |
|---|---|---|---|---|---|---|
| JBBS−4.−./Ex, JBBS−4.E−./Ex, JBBS−4.SC−./Ex, JBBS−4.SE−./Ex | P1 | 24 | 380 | 2.56 | 5 | 0 |

1. The entity concept allows interconnection of intrinsically safe apparatus and associated apparatus not specifically examined in combination as a system when the conditions below are met.

$V_{max} \geq V_{oc}$ or $V_t$ $I_{max} \geq I_{sc}$ or $I_t$ $P_i \geq P_o$ $C_i + C_{cable} \leq C_a$ $L_i + L_{cable} \leq L_a$

2. FM approved intrinsically safe apparatus with input entity parameters ($V_{max}$, $I_{max}$, $P_i$, $C_i$, and $L_i$) compatible with output entity parameters ($V_{oc}$ or $V_t$, $I_{sc}$ or $I_t$, $P_o$, $C_a$, $L_a$) of the associated apparatus. Only the associated apparatus may supply power to the circuit. The JBBS trunk out and drop connections (connectors S0−S4 or S0−S6, depending on model) pass the entity paratmeters through from the associated apparatus unchanged.

3. Wiring methods must be in accordance with the National Electrical Code, ANSI/NFPA 70, and ANSI/ISA RP12.06.01.

4. The junctions must be installed in a suitable equipment enclosure in accordance with ANSI/ISA S82.01 and S82.03.

| Rev | Description | Drft | Date | | |
|---|---|---|---|---|---|
| A | Release | BVL | 4/26/06 | Drawing No.: NI-2.406 | |
| | | | | Scale: NONE | Sheet 4 of 7 |

# FM Approved JBBS Fieldbus Junctions

## Intrinsically Safe for Division 1 With FISCO Parameters

FM Approved Associated Apparatus
With FISCO 1 Parameters:
$V_{oc} \leq 17.5V$, $I_{sc} \leq 380mA$, $P_o \leq 5.32W$

NON-HAZARDOUS LOCATION

HAZARDOUS (CLASSIFIED) LOCATION:
Class I, Division 1, Group A,B,C or D

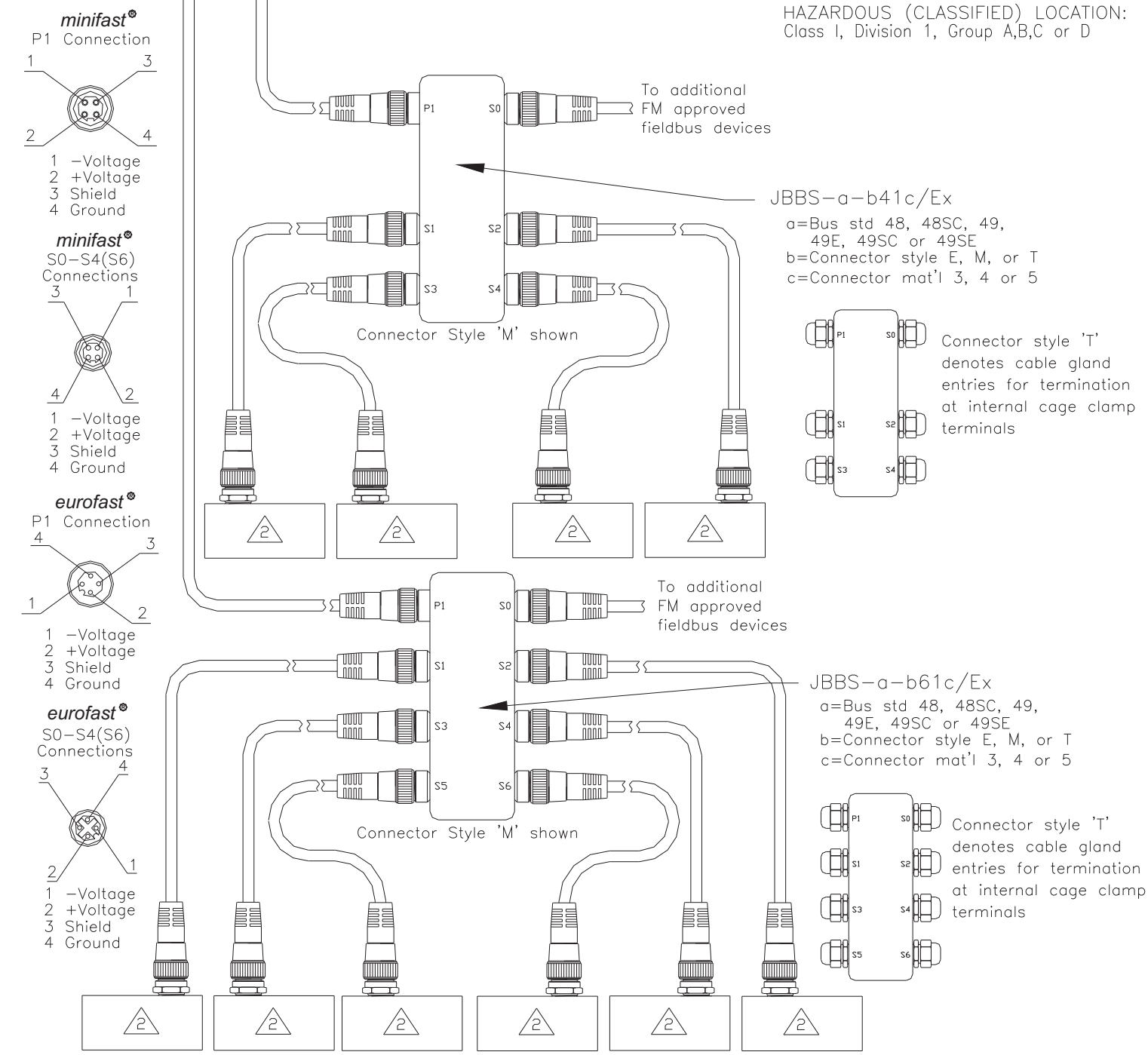


| FISCO Parameters for Model: | Terminal 2 | $V_{max}$ (V) | $I_{max}$ (mA) | $P_i$ (W) |
|---|---|---|---|---|
| JBBS−4.−./Ex, JBBS−4.E−./Ex, JBBS−4.SC−./Ex, JBBS−4.SE−./Ex | P1 | 17.5 | 380 | 5.32 |

1. The Fieldbus Intrinsic Safety Concept (FISCO) allows interconnection of FM approved FISCO intrinsically safe apparatus and associated apparatus not specifically examined as a system when the conditions below are met.

   $V_{max} \geq V_{oc}$ or $V_t$ $\quad I_{max} \geq I_{sc}$ or $I_t$ $\quad P_i \geq P_o$

2. FM approved intrinsically safe apparatus with FISCO input parameters ($V_{max}$, $I_{max}$, $P_i$) compatible with the FISCO output parameters ($V_{oc}$, $I_{sc}$, $P_o$) of the associated apparatus. Only the associated apparatus may supply power to the circuit. The JRBS 'Trunk Out' and drop connections (connectors S0−S4 or S0−S6, depending on model) pass the FISCO paratmeters through from the associated apparatus unchanged.

3. Wiring methods must be in accordance with the National Electrical Code, ANSI/NFPA 70, ANSI/ISA RP12.06.01; and the requirements for the fieldbus intrinsically safe concept (FISCO) of ISA−60079−27.

| Rev | Description | Drft | Date | | |
|---|---|---|---|---|---|
| A | Release | BVL | 4/26/06 | Drawing No.: NI-2.406 | |
| | | | | Scale: NONE | Sheet 5 of 7 |

# FM Approved JBBS Fieldbus Junctions

## Intrinsically Safe for Class I, Zone 0 with Entity Parameters

FM APPROVED

FM Approved Associated Apparatus
With Entity 1 Parameters:
$U_o \leq 24V$, $I_o \leq 250mA$, $P_o \leq 2.56W$
$C_a \geq \Sigma C_i + C_{cable}$ $L_a \geq \Sigma L_i + L_{cable}$

NON-HAZARDOUS LOCATION

HAZARDOUS (CLASSIFIED) LOCATION:
Class I, Zone 0, Group IIC, IIB or IIA

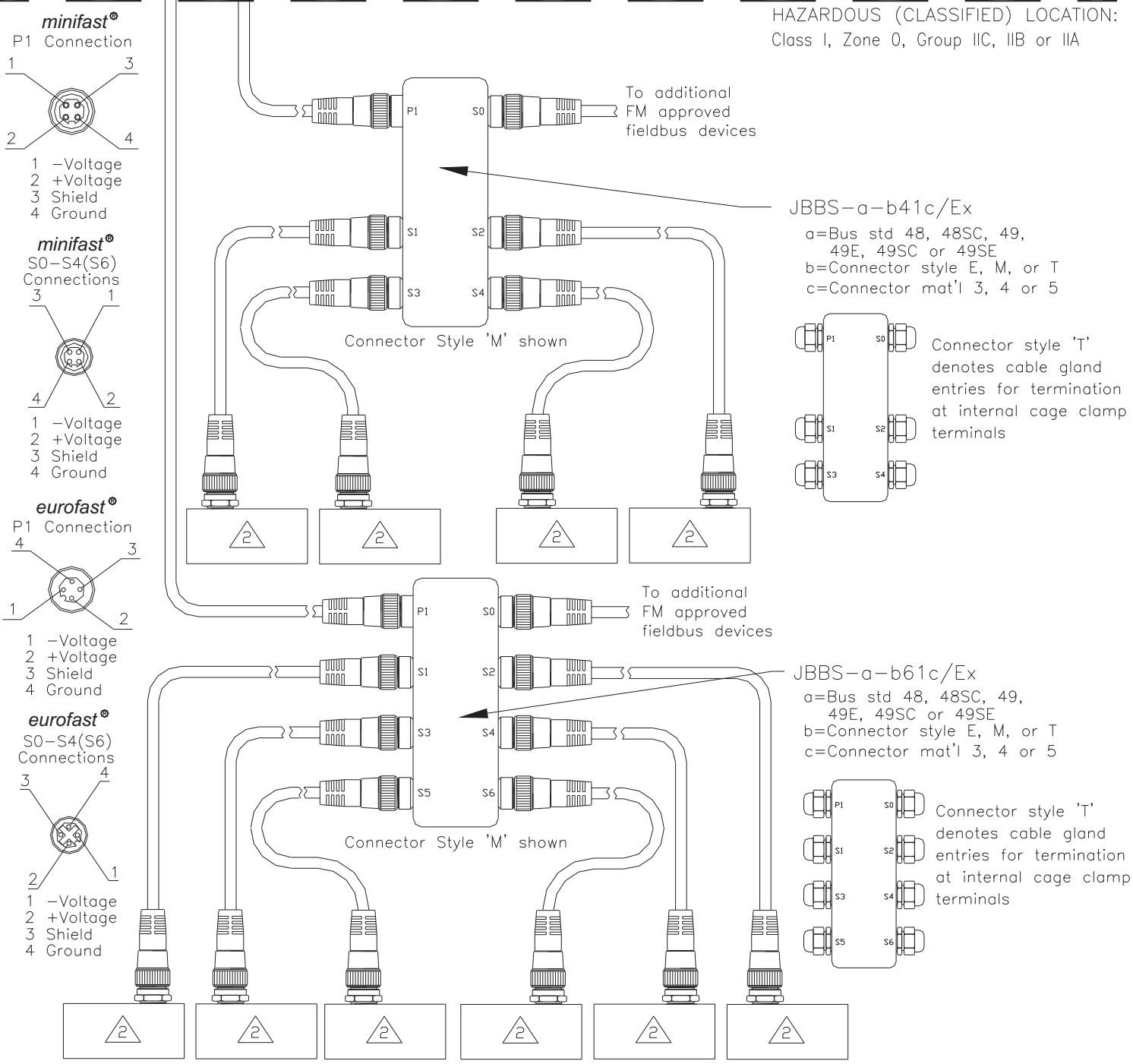


| Entity Parameters for Model: | Terminal 2 | $V_{max}$ (V) | $I_{max}$ (mA) | $P_i$ (W) | $C_i$ (nF) | $L_i$ (mH) |
|---|---|---|---|---|---|---|
| JBBS−4.−./Ex, JBBS−4.E−./Ex, JBBS−4.SC−./Ex, JBBS−4.SE−./Ex | P1 | 24 | 380 | 2.56 | 5 | 0 |

1. The entity concept allows interconnection of intrinsically safe apparatus and associated apparatus not specifically examined in combination as a system when the conditions below are met.

$U_i \geq U_o$ $I_i \geq I_o$ $P_i \geq P_o$ $C_i + C_{cable} \leq C_a$ $L_i + L_{cable} \leq L_a$

2. FM approved intrinsically safe apparatus with input entity parameters ($V_{max}$, $I_{max}$, $P_i$, $C_i$, and $L_i$) compatible with output entity parameters ($V_{oc}$ or $V^t$, $I_{sc}$ or $I_t$, $P_o$, $C_a$, $L_a$) of the associated apparatus. Only the associated apparatus may supply power to the circuit. The JRBS 'Trunk Out' and drop connections (connectors S0−S4 or S0−S6, depending on model) pass the entity paratmeters through from the associated apparatus unchanged.

3. Wiring methods must be in accordance with the National Electrical Code, ANSI/NFPA 70, and ANSI/ISA RP12.06.01.

| Rev | Description | Drft | Date | | |
|---|---|---|---|---|---|
| A | Release | BVL | 4/26/06 | Drawing No.: NI-2.406 | |
| | | | | Scale: NONE | Sheet 6 of 7 |

# FM Approved JBBS Fieldbus Junctions

## Intrinsically Safe for Class I, Zone 0 With FISCO Parameters

FM APPROVED

FM Approved Associated Apparatus
With FISCO 1 Parameters:
$U_o \leq 17.5V$, $I_o \leq 380mA$, $P_o \leq 5.32W$

NON-HAZARDOUS LOCATION

HAZARDOUS (CLASSIFIED) LOCATION:
Class I, Zone 0, Group IIC, IIB or IIA

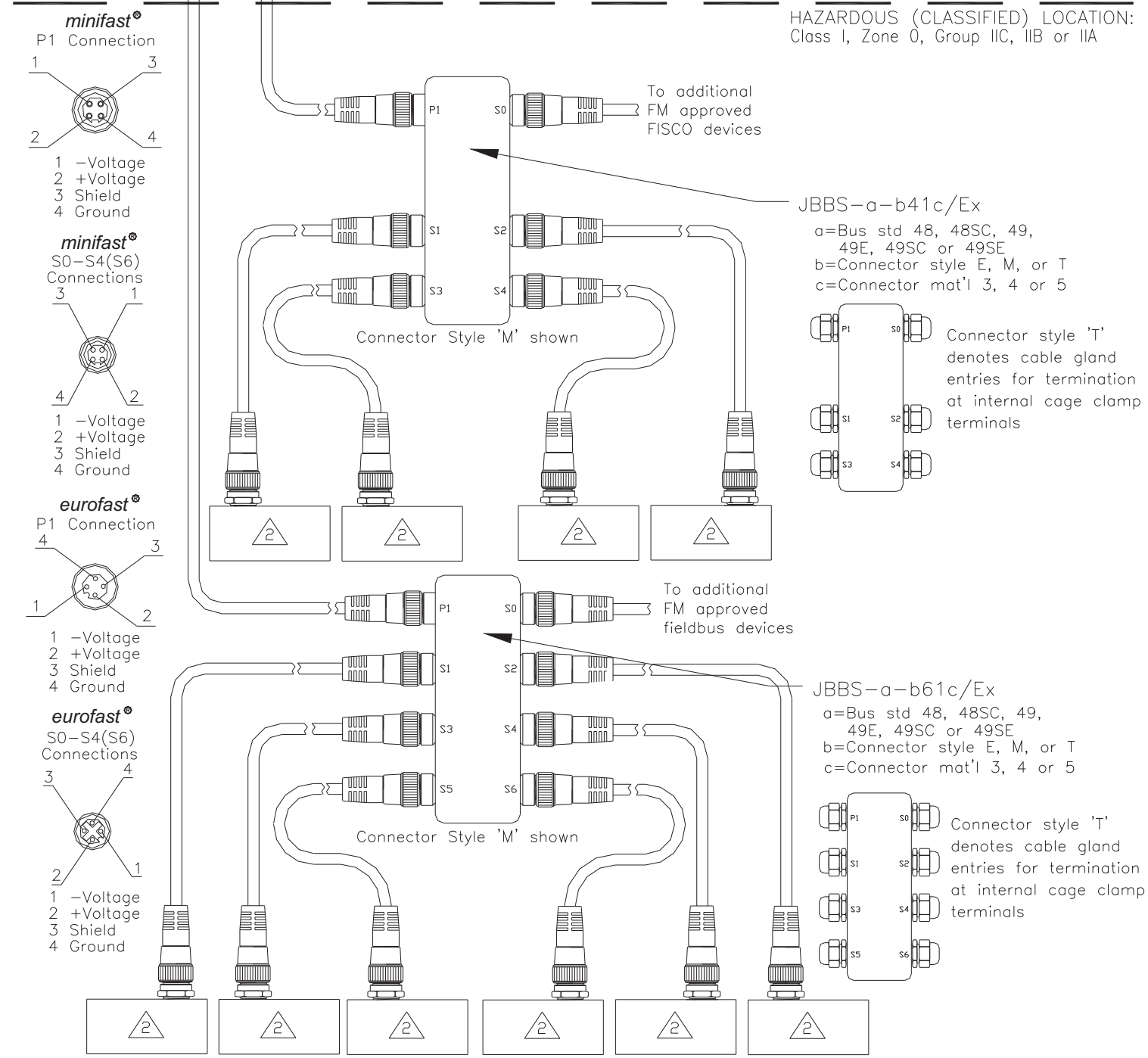


| FISCO Parameters for Model: | Terminal 2 | $V_{max}$ (V) | $I_{max}$ (mA) | $P_i$ (W) |
|---|---|---|---|---|
| JBBS−4.−./Ex, JBBS−4.E−./Ex, JBBS−4.SC−./Ex, JBBS−4.SE−./Ex | P1 | 17.5 | 380 | 5.32 |

1. The Fieldbus Intrinsic Safety Concept (FISCO) allows interconnection of FM approved FISCO intrinsically safe apparatus and associated apparatus not specifically examined as a system when the conditions below are met.
   $U_i \geq U_o$ $I_i \geq I_o$ $P_i \geq P_o$

2. FM approved intrinsically safe apparatus with FISCO input parameters ($U_i$, $I_i$, $P_i$) compatible with the FISCO output parameters ($U_o$, $I_o$, $P_o$) of the associated apparatus. Only the associated apparatus may supply power to the circuit. The JRBS 'Trunk Out' and drop connections (connectors S0−S4 or S0−S6, depending on model) pass the FISCO paratmeters through from the associated apparatus unchanged.

3. Wiring methods must be in accordance with the National Electrical Code, ANSI/NFPA 70; ANSI/ISA RP12.06.01; and the requirements for the fieldbus intrinsically safe concept (FISCO) of ISA−60079−27.

| Rev | Description | Drft | Date | | |
|---|---|---|---|---|---|
| A | Release | BVL | 4/26/06 | Drawing No.: NI−2.406 | |
| | | | | Scale: NONE | Sheet 7 of 7 |