EXCOM SYSTEM COMPONENTS

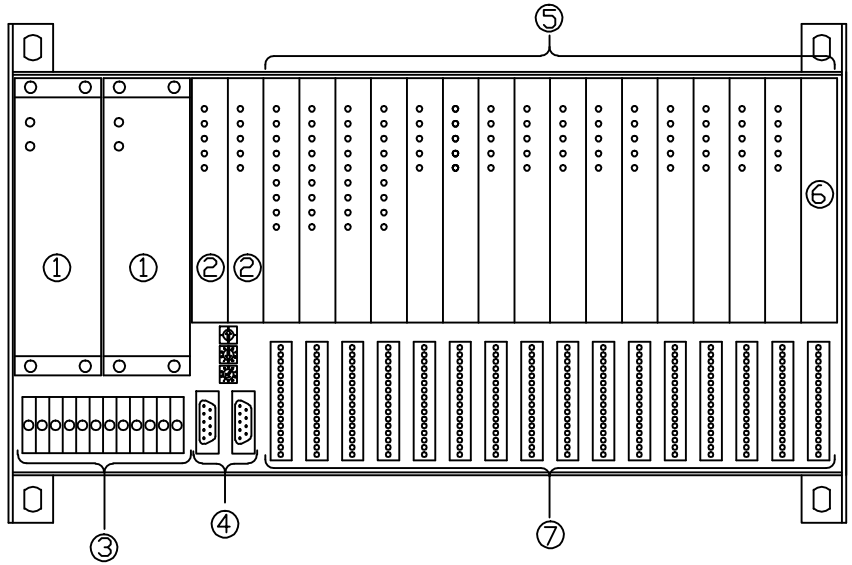

MT18 Backplane

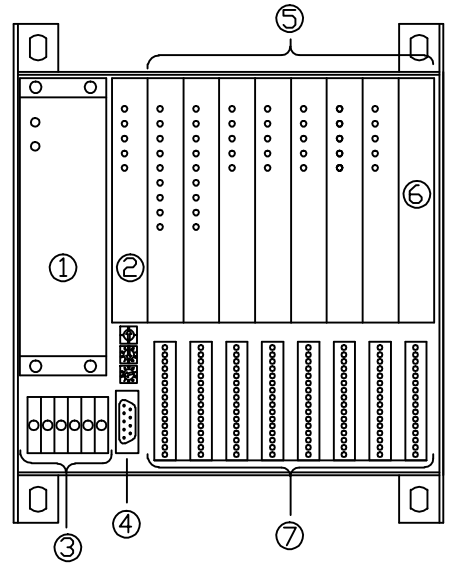

MT9 Backplane

① Power supply module PSD24Ex. MT18 backplanes may have 1 or 2 power supply modules, MT9 backplanes have 1 power supply module. Power supply modules may be withdrawn or inserted without removing external power.

② Gateway GDP–IS. MT18 backplanes may have 1 or 2 gateways in the slots indicated. MT9 backplanes have 1 gateway in the slot indicated. Gateways may be inserted or withdrawn without powering down the system.

③ External power supply terminals:

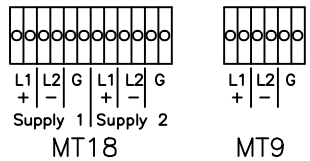

MT18 MT9

⚠ NOTE: The supplied terminal block cover must be secured in place before applying power!

④ Bus communication port(s). Standard DB9 receptacles with provision for jack–screw secured connection. MT18 backplanes have 2 ports. MT9 backplanes have 1 port.

⑤ I/O card slots. MT18 backplanes have 16 I/O card slots, MT9 backplanes have 8 I/O card slots in the positions indicated. Each slot may be occupied by any of the I/O cards listed in Table 1, Sheet 5, or be left empty. All I/O cards may be inserted or withdrawn without powering down the system.

⑥ Empty Gateway or I/O card slots must be filled by BM1 covers to maintain enclosure integrity.

⑦ Intrinsically safe field circuit terminals. Each I/O card slot has an associated blue 16–pole terminal directly below it for connection to intrinsically safe apparatus or simple apparatus. See Sheets 4 and 5 for connection diagrams and circuit parameters.

Rev	Descripton	Drft	Date
C	Update to new Std, Add new I/O card models	BVL	8/8/12
B	Add SC12Ex, correct Note 8 Sheets 2 and 3	BVL	9/29/04
A	Release	BVL	12/10/01

Drawing No.: IS-2.500

TURCK
3000 Campus Drive
Plymouth, MN 55441
Phone: (612) 553-7300

Title: FM Approvals Control Drawing For Excom Remote I/O System

Scale: None

INSTALLATIONS IN CLASS I, DIVISION 2 WITH CONNECTIONS TO DIVISION 1

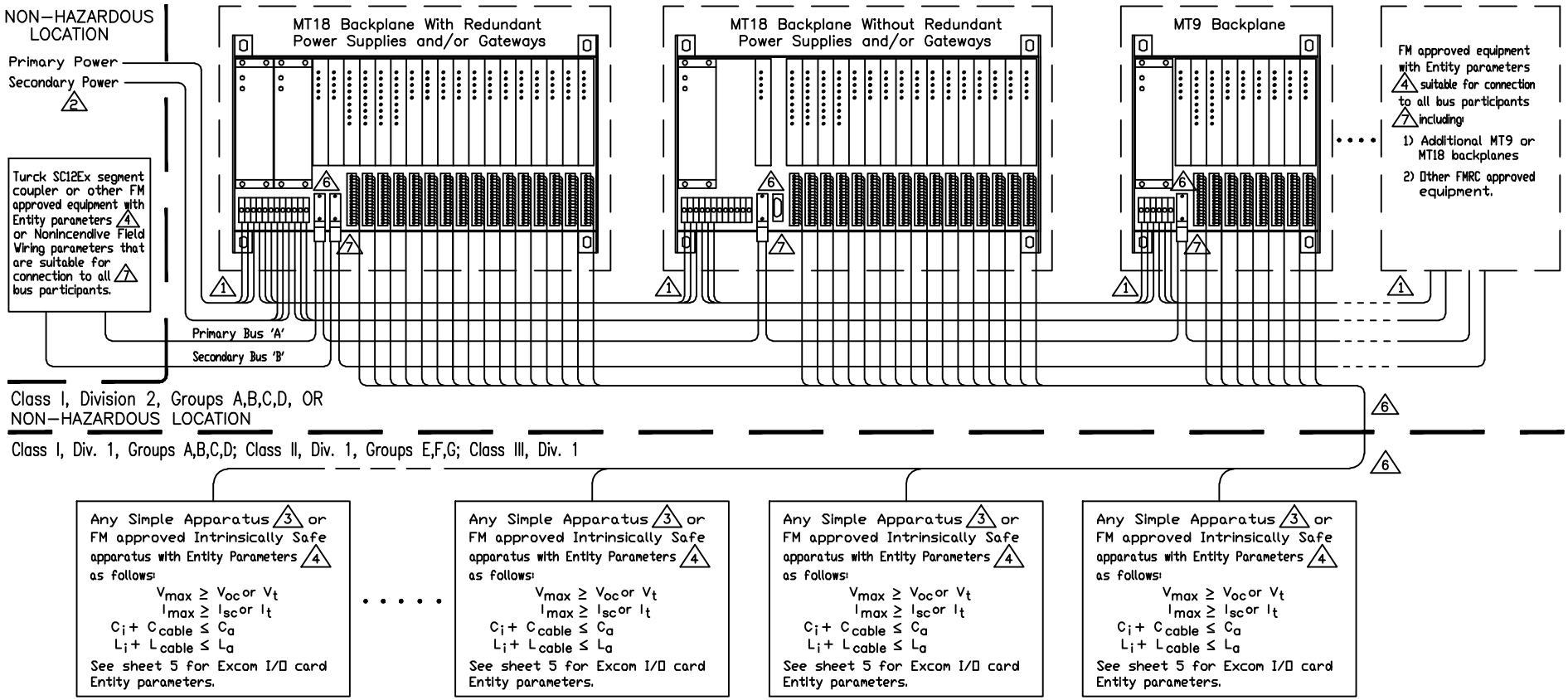

Notes:

1. The MT9 or MT18 must be installed in a suitable equipment enclosure in accordance with ANSI/ISA S82.01 and S82.03. Primary power and seconday power wiring external to the enclosure must be in accordance with Class I, Division 2 wiring practices per the National Electrical Code, ANSI/NFPA 70.

   ⚠ NOTE: The supplied terminal block cover must be secured in place before applying power.

2. Associated apparatus must not be connected to any device that uses or generates in excess of 250Vrms unless it has been determined that the voltage is adequately isolated from the associated apparatus.

3. A simple apparatus is defined as a device that will neither generate nor store more than 1.2V, 0.1A, 20uJ, or 25mW.

4. The entity concept allows interconnection of intrinsically safe apparatus and associated apparatus not specifically examined in combination as a system when the following conditions are met:
   $V_{max} \geq V_{oc}$ or V_t $\quad I_{max} \geq I_{sc}$ or I_t $\quad C_i + C_{cable} \leq C_a$ $\quad L_i + L_{cable} \leq L_a$
   Entity parameters are assigned to intrinsically safe apparatus and associated apparatus for circuits in Division 1 or 2. Nonincendive Field Wiring parameters are assigned to nonincendive equipment and associated nonincendive field wiring apparatus for nonincendive circuits in Division 2. For circuits in Division 1, Entity parameters must be matched with Entity parameters for the same Class, Division, and Group. For Division 2 locations, Nonincendive Field Wiring parameters may be used interchangably with Entity parameters for the same Class and Group.

5. If the electrical parameters of the cable are unknown, the following default values may be used: Capacitance – 60pF/foot Inductance – 0.2uH/foot

6. For US installations, intrinsically safe circuits must use wiring methods in accordance with the National Electrical Code, ANSI/NFPA 70, Article 504. For Canadian installations, intrinsically safe circuits must be installed in accordance with the Canadian Electrical Code, CSA C22.1, Appendix F.

7. Bus communication ports and end-of-line terminators are bi-directional, thus they will have both output and input Entity or Nonincendive Field Wiring parameters. Output parameters are V_{oc} and I_{sc}. Input parameters are V_{max} and I_{max}. The interconnection of multiple bus participants is acceptable when the following conditions are met:

   Each $V_{max} \geq$ each V_{oc} of all connected apparatus $\quad$ Each $I_{max} \geq$ the sum of the I_{sc} values of all connected apparatus (If no I_{max} is specified for an apparatus, this comparison is not necessary)

   Entity parameters for each bus communication port on MT9 and MT18 backplanes:
   Output: V_{oc} = 3.6 V, I_{sc} = 125 mA, P_o = 112.5 mW $\quad$ Input: V_{max} = 4.2 V, I_{max} = 4.8 A $\quad$ Cable capacitance ≤ 250 nF/km (76 nF/1000 ft) $\quad$ Cable L/R ≤ 15 µH/Ohm
   C and L values not specified as the cable capacitance and inductance are limited to these values

C	Update to new Std, Add new I/O card models	BVL	8/6/12	Drawing No.: IS-2.500	
Rev	Description	Drft	Date	Scale: None	Sheet 2 of 5

INSTALLATIONS IN CLASS I, ZONE 1 WITH CONNECTIONS TO ZONE 0

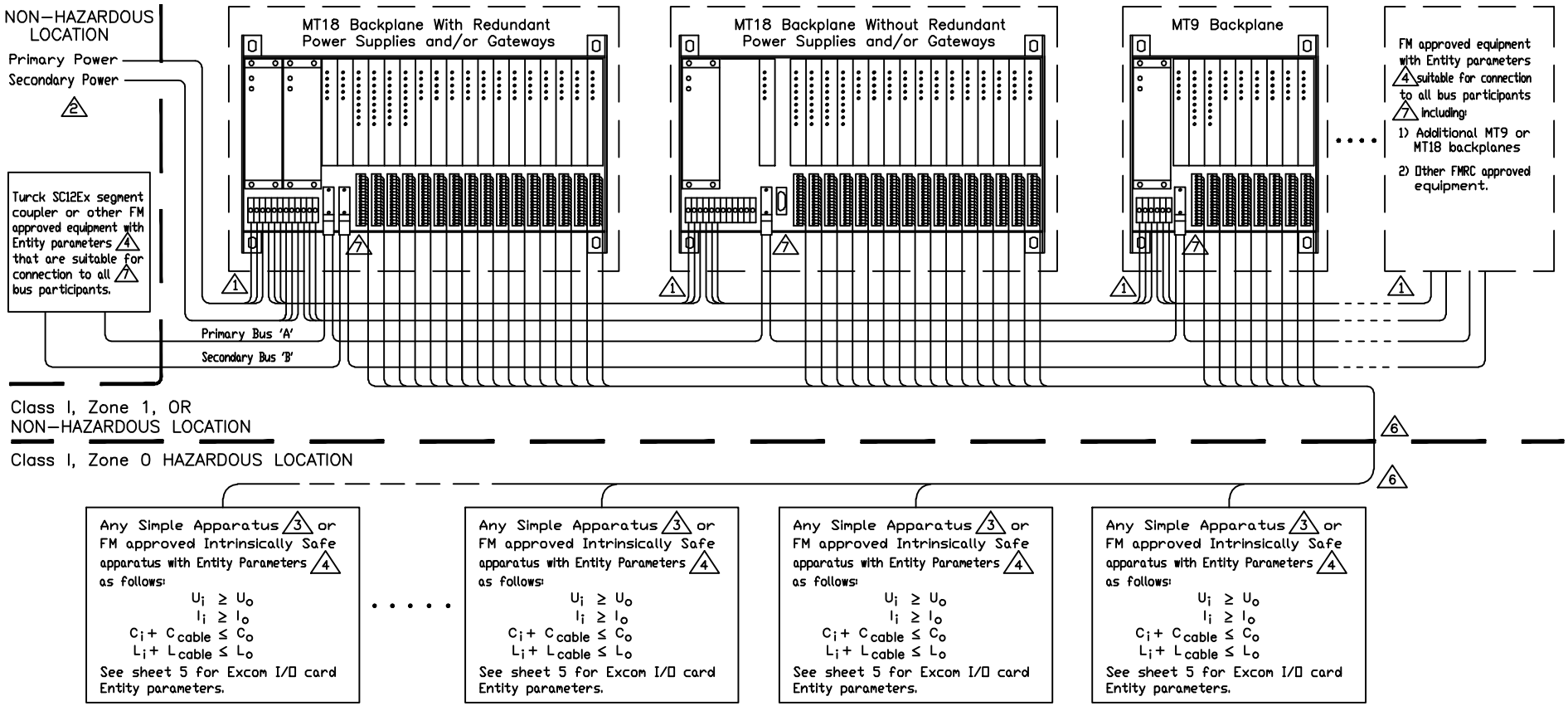

Notes:

1. The MT9 or MT18 must be installed in an equipment enclosure in compliance with the mounting, spacing and segregation requirements of Zone 1. Primary and seconday power wiring must be installed in accordance with Zone 1 wiring practices per the National Electrical Code, ANSI/NFPA 70.

   ⚠ WARNING: Part of the enclosure is made of plastic. To prevent the risk of electrostatic sparking, clean only with a damp cloth.

   ⚠ WARNING: The supplied terminal block cover must be secured in place before applying power.

2. Associated apparatus must not be connected to any device that uses or generates in excess of 250Vrms unless it has been determined that the voltage is adequately isolated from the associated apparatus.

3. A simple apparatus is defined as a device that will neither generate nor store more than 1.2V, 0.1A, 20uJ, or 25mW.

4. The entity concept allows interconnection of intrinsically safe apparatus and associated apparatus not specifically examined in combination as a system when the following conditions are met:
   $U_i \geq U_o \quad I_i \geq I_o \quad C_i + C_{cable} \leq C_o \quad L_i + L_{cable} \leq L_o$

5. If the electrical parameters of the cable are unknown, the following default values may be used: Capacitance – 60pF/foot Inductance – 0.2uH/foot

6. For US installations, intrinsically safe circuits must use wiring methods in accordance with the National Electrical Code, ANSI/NFPA 70, Article 504. For Canadian installations, intrinsically safe circuits must be installed in accordance with the Canadian Electrical Code, CSA C22.1.

7. Bus communication ports and end-of-line terminators are bi-directional, thus they will have both output and input Entity parameters. Output parameters are U_o and I_o. Input parameters are U_i and I_i. The interconnection of multiple bus participants is acceptable when the following conditions are met:

   Each $U_i \geq$ each U_o of all connected apparatus Each $I_i \geq$ the sum of the I_o values of all connected apparatus (If no I_i is specified for an apparatus, this comparison is not necessary)

   Entity parameters for each bus communication port on MT9 and MT18 backplanes with GDP-IS gateways:
   Output: $U_o = 3.6$ V, $I_o = 125$ mA, $P_o = 112.5$ mW Input: $U_i = 4.2$ V, $I_i = 4.8$ A

   Cable capacitance ≤ 250 nF/km (76 nF/1000 ft) Cable L/R ≤ 15 µH/Ohm
   C and L values not specified as the cable capacitance and inductance are limited to these values

Rev	Description	Drft	Date		
C	Update to new Std, Add new I/O card models	BVL	8/6/12	Drawing No.: IS-2.500	
				Scale: None	Sheet 3 of 5

CONNECTION DIAGRAMS FOR EXCOM I/O CARDS

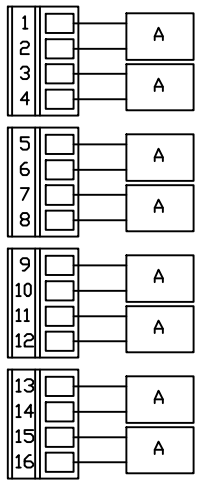

CONNECTION DIAGRAM I

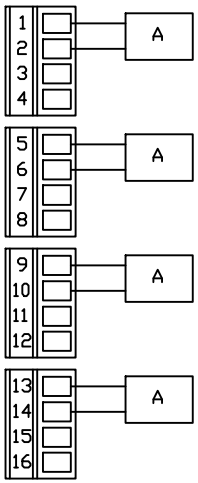

CONNECTION DIAGRAM II

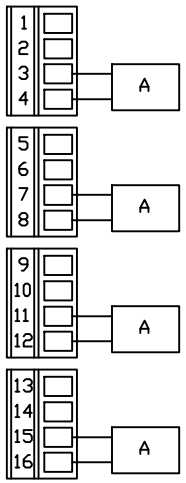

CONNECTION DIAGRAM III

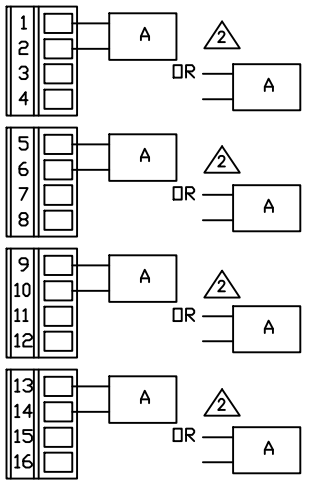

CONNECTION DIAGRAM IV

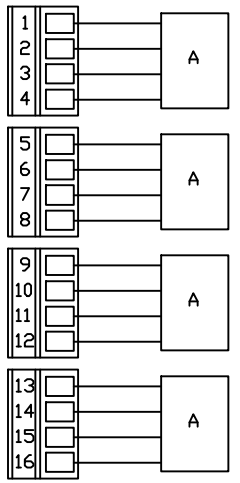

CONNECTION DIAGRAM V

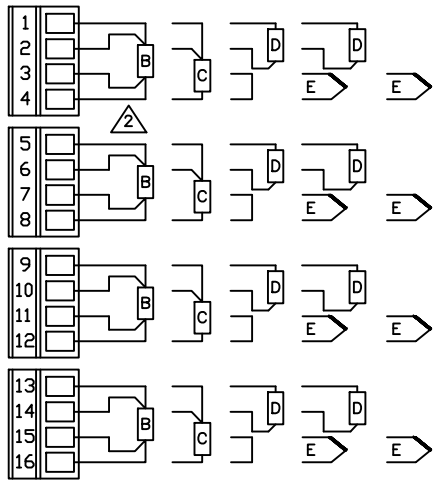

CONNECTION DIAGRAM VI

A = Any smple apparatus, or any FM approved intrinsically safe apparatus with compatable Entity Concept parameters

B = Any 4–wire Pt100, PT1000, or Ni100 resistance temperature detector; or any simple apparatus; or any FM approved intrinsically safe apparatus with compatable Entity Concept parameters

C = Any 3–wire Pt100, PT1000, or Ni100 resistance temperature detector; or any simple apparatus; or any FM approved intrinsically safe apparatus with compatable Entity Concept parameters

D = Any 2–wire Pt100, PT1000, or Ni100 resistance temperature detector; or any simple apparatus; or any FM approved intrinsically safe apparatus with compatable Entity Concept parameters

E = Any type B, E, J, K, L, N, R, S, or T thermocouple; or any simple apparatus; or any FM approved intrinsically safe apparatus with compatable Entity Concept parameters.

Notes:

1. The connection diagrams above represent the field connection terminal block corresponding to a given single I/O card slot. MT9 backplanes have 8 such slots, MT18 backplanes have 16.
2. Each of the four channels may be considered separately as to which of the wiring configurations shown is used.
3. See Tables 1 and 2, Sheet 5, for the Entity parameters of specific I/O cards.

Rev	Description	Drft	Date		
C	Update to new Std, Add new I/O card models	BVL	8/6/12	Drawing No.: IS–2.500	
				Scale: None	Sheet 4 of 5

TABLE 1: I/O CARD ENTITY PARAMETERS

Model	Terminals	Connection Diagram	V_{oc} (V)	I_{sc} (mA)	V_t (V)	I_t (mA)	U_o (V)	I_o (mA)	P_o (mW)	Circuit Type	U_Q (V)	R_i (Ω)	L_i (mH)	C_i (uF)	L_a (mH) AB/CDEFG	L_o IIC/IIB	C_a (uF) AB/CDEFG	C_o IIC/IIB
AI401Ex	1-2, 5-6, 9-10, 13-14	IV	19.1	90	na	na	22.1	93	615	Trapezoidal	27.54	304	0	0	0.2/1.0		0.17/0.96	
	3-4, 7-8, 11-12, 15-16	IV	6.0	2.5	na	na	6.0	2.5	4.0	Linear	na	na	0	0	10/20		1.9/8.6	
AIH40Ex	1-2, 5-6, 9-10, 13-14	II	22.1	93	na	na	22.1	93	640	Trapezoidal	27.54	298	0.22	1.1 nF	1.78/1.78		0.1/0.5	
AIH41Ex	1-2, 5-6, 9-10, 13-14	III	7.2	16	na	na	7.2	16	29	Linear	na	na	0.11	1.1 nF	*		*	
AO40Ex	1-2, 5-6, 9-10, 13-14	II	18.9	80	na	na	18.9	80	510	Trapezoidal	28.35	354	0	25 nF	2.0/2.0		0.1/1	
															1.0/1.0		0.1/1	
															0.5/0.5		0.12/1	
															0.2/0.2		0.15/1.17	
AO401Ex	1-2, 5-6, 9-10, 13-14	II	18.9	80	na	na	18.9	80	510	Trapezoidal	28.35	354	0	25 nF	2.0/2.0		0.1/1	
															1.0/1.0		0.1/1	
															0.5/0.5		0.12/1	
															0.2/0.2		0.15/1.17	
DM80Ex, DF20Ex	1-2, 3-4, 5-6, 7-8, 9-10, 11-12, 13-14, 15-16	I	9.6	44	na	na	9.6	44	106	Linear	na	na	0	60 nF	2.0/2.0		0.9/5.1	
															1.0/1.0		1.1/6.1	
															0.5/0.5		1.3/7.3	
															0.2/0.2		1.7/8.6	
DI40Ex	1-2, 5-6, 9-10, 13-14	II	8.7	9.6	na	na	8.7	9.6	510	Linear	na	na	0	10 nF	2.0/5.0		1.2/5.2	
DO401Ex	1-2, 5-6, 9-10, 13-14	IV	25.0	80	na	na	25.0	80	750	Rectangular	na	na	0	0	na/2.0		na/0.35	
															na/1.0		na/0.41	
															na/0.5		na/0.50	
															na/0.2		na/0.66	
															0.1/0.1		0.11/0.82	
	3-4, 7-8, 11-12, 15-16	IV	19.0	100	na	na	19.0	100	710	Rectangular	na	na	0	0	2.0/2.0		na/1.0	
															1.0/1.0		0.13/1.0	
															0.5/0.5		0.14/1.0	
															0.2/0.2		0.17/1.0	
TI40Ex	1-2-3-4, 5-6-7-8, 9-10-11-12, 13-14-15-16	VI	na	na	5.5	25	5.5	25	35	Linear	na	na	0	0.06	2.0/2.0 *		2.6/15 *	
															1.0/1.0 *		2.9/17 *	
															0.5/0.5 *		3.6/21 *	
															0.2/0.2 *		4.5/27 *	

*See Table 2 for connection to active source devices.

TABLE 2: PARAMETERS FOR CONNECTION TO ACTIVE SOURCE DEVICES

Parameters / Model	Parameters for connection to active sources with linear output characteristics							Parameters for connection to active sources with trapezoidal output characteristics							Parameters for connection to active sources with right angle output characteristics						
	V_{oc} (V)	I_{sc} (mA)	P_i (mW)	L_a(mH) AB	C_a(uF) AB	L_a(mH) CDEFG	C_a(uF) CDEFG	V_{oc} (V)	I_{sc} (mA)	P_i (mW)	L_a(mH) AB	C_a(uF) AB	L_a(mH) CDEFG	C_a(uF) CDEFG	V_{oc} (V)	I_{sc} (mA)	P_i (mW)	L_a(mH) AB	C_a(uF) AB	L_a(mH) CDEFG	C_a(uF) CDEFG
AI401Ex	30	107	644	10	0.19	20	8.6	30	107	644	10	0.19	20	8.6	30	107	644	10	0.19	20	8.6
AIH41Ex	2	100		2.4	4.2	9.8	33	22.1	93		0.5	60 nF	2	250 nF	2	100		1.99	0.5	4.89	3
	5	100		2.4	1.3	9.8	8.3								5	100		1.99	0.3	4.89	1.5
	10	100		2.4	0.358	9.8	2.1								10	90		1.99	0.2	4.89	1
	15	100		2.4	0.158	9.8	1.1								15	56		0.99	100 nF	4.89	0.5
	16.5	100		2.4	0.126	9.8	0.95								16.5	49		0.99	100 nF	4.89	0.5
															16.5	97		–	–	1.99	0.4
	20	100		2.4	0.087	9.8	0.688								20	35		0.99	70 nF	4.89	0.3
	22	100		2.4	0.071	9.8	0.594								20	80		–	–	0.99	0.3
	25	100		2.4	0.054	9.8	0.465								22	65		–	–	0.99	0.3
	30	100		2.4	0.037	9.8	0.345								30	50		–	–	0.99	0.25
TI40Ex	1.2	50		2	1.6	2	9.8	1.2	50		2	1.6	2	9.8	1.2	50		2	1.6	2	9.8
				1	1.9	1	12				1	1.9	1	12				1	1.9	1	12
				0.5	2.3	0.5	14				0.5	2.3	0.5	14				0.5	2.3	0.5	14
				0.2	3.0	0.2	19				0.2	3.0	0.2	19				0.2	3.0	0.2	19

Rev	Description	Drft	Date		
C	Update to new Std, Add new I/O card models	BVL	8/6/12	Drawing No.: IS-2.500	
				Scale: None	Sheet 5 of 5