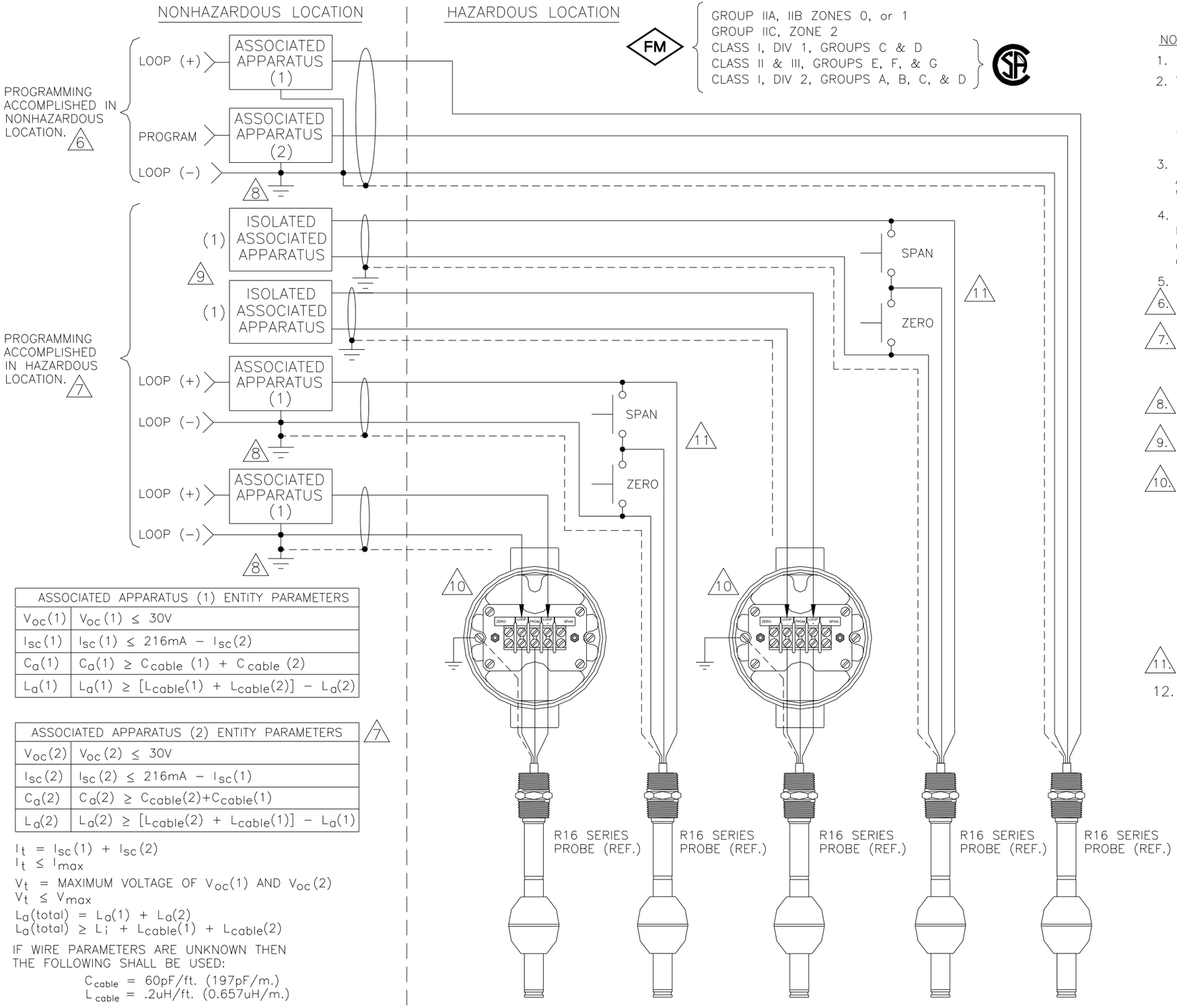

ASSOCIATED APPARATUS (1) ENTITY PARAMETERS	
$V_{oc}(1)$	$V_{oc}(1) \leq 30V$
$I_{sc}(1)$	$I_{sc}(1) \leq 216mA - I_{sc}(2)$
$C_a(1)$	$C_a(1) \geq C_{cable}(1) + C_{cable}(2)$
$L_a(1)$	$L_a(1) \geq [L_{cable}(1) + L_{cable}(2)] - L_a(2)$

ASSOCIATED APPARATUS (2) ENTITY PARAMETERS	
$V_{oc}(2)$	$V_{oc}(2) \leq 30V$
$I_{sc}(2)$	$I_{sc}(2) \leq 216mA - I_{sc}(1)$
$C_a(2)$	$C_a(2) \geq C_{cable}(2)+C_{cable}(1)$
$L_a(2)$	$L_a(2) \geq [L_{cable}(2) + L_{cable}(1)] - L_a(1)$

7

$I_t = I_{sc}(1) + I_{sc}(2)$
$I_t \leq I_{max}$

V_t = MAXIMUM VOLTAGE OF $V_{oc}(1)$ AND $V_{oc}(2)$
$V_t \leq V_{max}$

$L_a(total) = L_a(1) + L_a(2)$
$L_a(total) \geq L_i + L_{cable}(1) + L_{cable}(2)$

IF WIRE PARAMETERS ARE UNKNOWN THEN THE FOLLOWING SHALL BE USED:

C_{cable} = 60pF/ft. (197pF/m.)
L_{cable} = .2uH/ft. (0.657uH/m.)

FOR EXAMPLE: 1000 ft X 60 pF/ft. = 0.06uF
100 m X 197 pF/m. = 0.0197uF

NOTES: UNLESS OTHERWISE SPECIFIED

1. MINIMUM VOLTAGE TO OPERATE THE R16-SERIES PROBE IS 13.5V.
2. THE SELECTED BARRIER SHALL BE APPROVED WITH INTRINSICALLY SAFE CIRCUITS FOR THE HAZARDOUS LOCATION GROUP AND ZONE AS APPROPRIATE FOR THE APPLICATION AND INSTALLED IN ACCORDANCE WITH MANUFACTURER'S INSTALLATION INSTRUCTIONS.
3. ELECTRONIC EQUIPMENT CONNECTED TO THE ASSOCIATED APPARATUS MUST NOT USE OR GENERATE MORE THAN 250Vrms, WITH RESPECT TO GROUND.
4. FM APPROVED INSTALLATIONS SHALL COMPLY WITH THE LATEST EDITION OF THE NATIONAL ELECTRICAL CODE (ANSI/NFPA 70). CSA CERTIFIED INSTALLATIONS SHALL COMPLY WITH THE CANADIAN ELECTRICAL CODE (CSA C22.1 APPENDIX F).
5. ALL CABLES MUST BE 24 GAUGE OR HEAVIER.

6. ASSOCIATED APPARATUS (2) IS ONLY REQUIRED IF THE PROGRAMMING IS ACCOMPLISHED IN THE NON HAZARDOUS AREA.

7. IF ASSOCIATED APPARATUS (2) IS NOT REQUIRED BECAUSE PROGRAMMING IS NOT ACCOMPLISHED IN THE NON HAZARDOUS LOCATION, SET THE ASSOCIATED APPARATUS (2) ENTITY PARAMETERS TO ZERO (0) FOR ENTITY PARAMETER CALCULATIONS.

8. TERMINATE ASSOCIATED APPARATUS GROUND TO GROUND ELECTRODE PER NEC ARTICLE 250. RESISTANCE TO GROUND MUST NOT EXCEED 1 OHM.

9. ISOLATED ASSOCIATED APPARATUS DOES NOT REQUIRE CONNECTION TO GROUND. SEE APPARATUS CONTROL DRAWING FOR GUIDANCE.

10. TB-R16B OR TB-R16S JUNCTION BOX WITH ZERO AND SPAN PROGRAMMING SWITCHES.

JUNCTION BOX CONNECTIONS

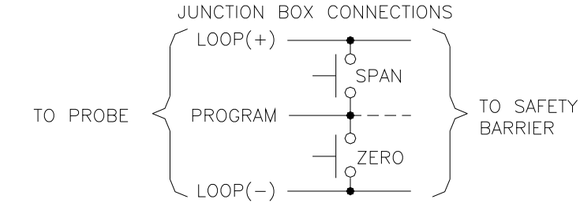

11. USER-SUPPLIED PROGRAMMING SWITCHES.

12. PROBE CONNECTIONS

CABLE VERSIONS		CONNECTOR VERSIONS	
RED	LOOP (+)	PIN 1	LOOP (−)
WHITE	PROGRAM	PIN 2	PROGRAM
BLACK	LOOP (−)	PIN 3	LOOP (+)
SHIELD	GROUND	PIN 4	SHIELD (CASE)

R16 PROBE ENTITY PARAMETERS				
V_{max}	I_{max}	P_i	C_i	L_i
30V	216mA	1.0W	0 F	0 H

Rev	Description	Drft	Date
A	Release	BVL	9/7/04

Drawing No.: IS-1.111

TURCK
3000 Campus Drive
Plymouth, MN 55441
Phone: (763) 553-7300

Title: Control Drawing for Intrinsically Safe R16 LDT Level Probes

Scale: NONE

Sheet 1 of 1