TURCK

Industrial
Automation

BL20 – PROFIBUS-DP

HARDWARE AND ENGINEERING

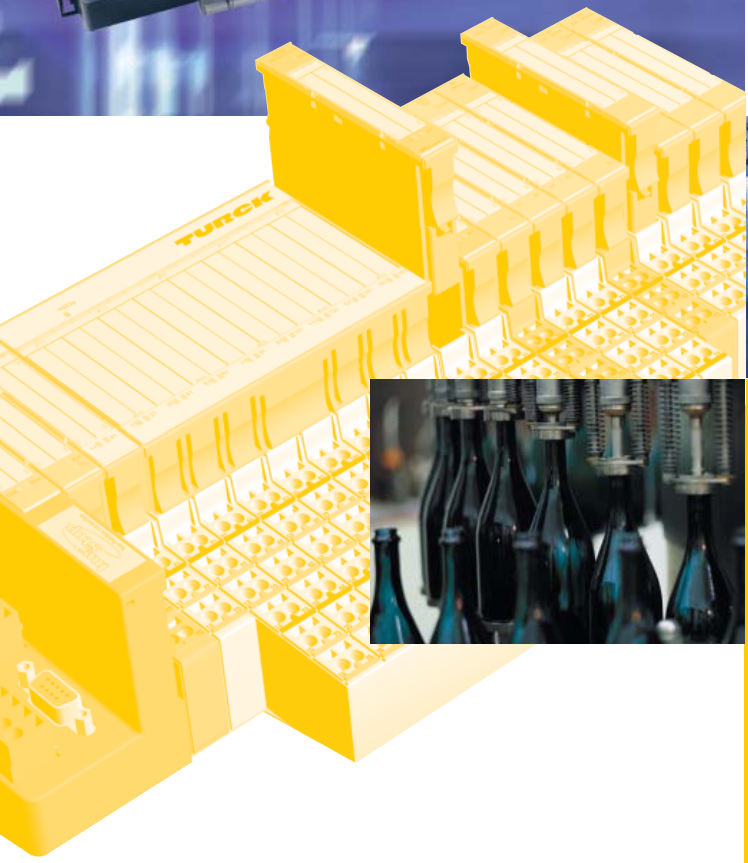

All brand and product names are trademarks or registered trade marks of the owner concerned.

Ausgabe 03/ 2008

© Hans Turck GmbH, Mülheim an der Ruhr

All rights reserved, including those of the translation.

No part of this manual may be reproduced in any form (printed, photocopy, microfilm or any other process) or processed, duplicated or distributed by means of electronic systems without written permission of Hans Turck GmbH & Co. KG, Mülheim an der Ruhr.

Subject to alterations without notice.

Warning!
Dangerous electrical voltage!

Before commencing the installation

- Disconnect the power supply of the device.
- Ensure that devices cannot be accidentally restarted.
- Verify isolation from the supply.
- Earth and short circuit.
- Cover or enclose neighboring units that are live.
- Follow the engineering instructions of the device concerned.
- Only suitably qualified personnel in accordance with EN 50 110-1/-2 (VDE 0 105 Part 100) may work on this device/system.
- Before installation and before touching the device ensure that you are free of electrostatic charge.
- The functional earth (FE) must be connected to the protective earth (PE) or to the potential equalization. The system installer is responsible for implementing this connection.
- Connecting cables and signal lines should be installed so that inductive or capacitive interference do not impair the automation functions.
- Install automation devices and related operating elements in such a way that they are well protected against unintentional operation.
- Suitable safety hardware and software measures should be implemented for the I/O interface so that a line or wire breakage on the signal side does not result in undefined states in the automation devices.
- Ensure a reliable electrical isolation of the low voltage for the 24 volt supply. Only use power supply units complying with IEC 60 364-4-41 (VDE 0 100 Part 410) or HD 384.4.41 S2.
- Deviations of the mains voltage from the rated value must not exceed the tolerance limits given in the specifications, otherwise this may cause malfunction and dangerous operation.
- Emergency stop devices complying with IEC/EN 60 204-1 must be effective in all operating modes of the automation devices. Unlatching the emergency-stop devices must not cause restart.

- Devices that are designed for mounting in housings or control cabinets must only be operated and controlled after they have been installed with the housing closed. Desktop or portable units must only be operated and controlled in enclosed housings.
- Measures should be taken to ensure the proper restart of programs interrupted after a voltage dip or failure. This should not cause dangerous operating states even for a short time. If necessary, emergency-stop devices should be implemented.
- Wherever faults in the automation system may cause damage to persons or property, external measures must be implemented to ensure a safe operating state in the event of a fault or malfunction (for example, by means of separate limit switches, mechanical interlocks etc.).
- The electrical installation must be carried out in accordance with the relevant regulations (e. g. with regard to cable cross sections, fuses, PE).
- All work relating to transport, installation, commissioning and maintenance must only be carried out by qualified personnel. (IEC 60 364 and HD 384 and national work safety regulations).
- All shrouds and doors must be kept closed during operation.

Table of Contents

About this Manual

Documentation Concept 0-2

Overview 0-3
- Prescribed Use 0-3
- Notes Concerning Planning /Installation of this Product 0-3

Description of Symbols Used 0-4

List of Revisions 0-5

1 BL20 Philosophy

The Basic Concept 1-2

BL20 Components 1-4
- Gateways 1-4
- Power Distribution Modules 1-6
- Electronics Modules 1-7
- Base Modules 1-9
- BL20 Economy 1-10
- End Plate 1-11
- End Bracket 1-11
- Jumpers 1-12
- Shield Connection (Gateway) 1-13
- Marking Material 1-13
- Shield Connection, 2-Pole for Analog Modules 1-14

2 PROFIBUS-DP

System overview 2-2
- Master/Slave system 2-3
- System configuration and device types 2-4
- Topology 2-6
- Maximum system expansion 2-7
- Transmission rate/Cycle times 2-8
- Transmission cables 2-9
- Diagnostic functions 2-11
- Sync and Freeze Mode 2-12
- System performance 2-13
- GSD files 2-16

3 Gateways for PROFIBUS-DP

Introduction 3-3

Function 3-3
Versions 3-3
Connections and switches 3-8

Technical Data 3-10
General Technical Data 3-10
Structure Diagram for the Gateways 3-16
Technical Data for BL20-GWBR-PBDP 3-17
Technical Data for BL20-GW-PBDP-1.5MB/ BL20-GW-PBDP-1.5MB-S/ BL20-GW-PBDP-12MB and BL20-GW-PBDP-12MB-STD: 3-18

Fieldbus Connections 3-20
Fieldbus Connection via SUB-D Female Connectors 3-20
Fieldbus Connection via Direct Wiring (only for 1.5 MBaud Gateway) . 3-22

Service Interface Connection 3-23
Connection Using a BL20 Cable 3-23
Connection Using Commercially Available Cables 3-25

Address Setting 3-27

Setting Parameters 3-29
Gateway Parameters 3-29
Module parameters 3-36
Module Description in the Electronic Device Data Sheets (GSD) 3-61
Example of a PROFIBUS-DP Configuration 3-63

Status Indicators/Diagnostic Messages Gateway 3-70
Diagnostic Messages via LEDs 3-70
Diagnostic Messages via the Software 3-74

Diagnosis 3-75
Device Related diagnosis 3-76
Device-/ identifier - and channel specific diagnosis 3-77
Description of the Gateway Diagnosis Bits 3-79
Module diagnosis 3-82

4 Connections to Automation Devices

Introduction 4-2

Electronic Device Data Sheets (GSD) 4-3
Electronic Data Sheet File 4-4
Compressing Module Process Data 4-6
Example of Compressing Module Process Data 4-9
General Note 4-13
Standard Module Description 4-15

Module Description according to Type 4-16

Connection to a Siemens S7 PLC 4-17
Reading-in the GSD File 4-17
Selecting the BL20 Gateway as a Slave 4-19
Example of a Mixed Usage Configuration 4-20
Setting Gateway Parameters 4-20
Configuring the BL20 Station 4-22
Setting Parameters for BL20 modules 4-22
Error Diagnostics (Station Diagnostics) when connected to a Siemens S7 PLC 4-23

Diagnostics on PROFIBUS-DP 4-24
Diagnostic messages in the PLC 4-24

Example of Diagnostics with a Siemens S7-400 PLC 4-27
Short-Circuit in a Digital Output Module 4-29

5 Guidelines for Station Planning

Module Arrangement on the Mounting Rail 5-2
Random Module Arrangement 5-2
Complete Planning 5-2
Maximum System Extension 5-3
Overview of the process data, diagnostic, parameter and configuration bytes based on an example 5-11

Power Supply 5-14
Power Supply to the Gateway 5-14
Module Bus Refreshing 5-14
Creating Potential Groups 5-21
Protecting the Service Interface on the Gateway 5-23
C-Rail (Cross Connection) 5-24
Direct Wiring of Relay Modules 5-26

Plugging and Pulling Electronics Modules 5-27

Extending an Existing Station 5-28

Firmware Download 5-29

6 Guidelines for Electrical Installation

General Notes 6-2
Cable Routing 6-2
Lightning Protection 6-3
Transmission Cables 6-4
Cable Types 6-5

Potential Relationships 6-6
General 6-6
Potential-Free Installation 6-7
Non-isolated Installation 6-7

Electromagnetic Compatibility (EMC) 6-8
Ensuring Electromagnetic Compatibility 6-8
Grounding of Inactive Metal Components 6-8
Protection against high frequency interference signals. 6-10
EMC Compliant Cabinet Installation 6-12
Shielding of cables 6-13
Potential Compensation 6-15
Switching Inductive Loads 6-17
Protection against Electrostatic Discharge (ESD) 6-17

Bus Connection 6-18

Two-Pole Shield Connection 6-20

7 Integration of Technology Modules in PROFIBUS-DP

Integration of the Counter Module BL20-1CNT-24VDC 7-2
Count mode: data image 7-2
Measurement mode: data image 7-22
Guide to setting the High and Low words 7-40
Setting the lower and upper measuring limits 7-45

Integration of the RS232 module BL20-1RS232 7-50
Data Image 7-50

Integration of the RS485/422 module BL20-1RS485/422 7-55
Data Image 7-55

Integration of the SSI module BL20-1SSI 7-60
Data image 7-60

Integration of the SWIRE Module BL20-E-1SWIRE 7-70
Data mapping under PROFIBUS-DP 7-70

8 BL20-Approvals for Zone 2/ Division 2

Certified BL20-Components 8-2

Certificates for Europe 8-4
Type Examination Certificate 8-4
ATEX IEC Rev.1.doc 8-10
Declaration of Conformity/ Konformitätserklärung 8-11

Zertifikate für Europa 8-12

Baumusterprüfbescheinigung 8-12
ATEX IEC Rev.1.doc 8-18
Declaration of Conformity/Konformitätserklärung 8-19

Certificates IECEx 8-20
IECEx Certificate of Conformity 8-20
ATEX IEC Rev.1.doc 8-25

Certificates for the USA 8-26
Certificate Of Compliance 8-26
Installation Drawings 8-30

Certificates for Canada 8-32
Certificate Of Compliance 8-32
Installation Drawings 8-36

9 Apendix

Function Blocks for S7 9-2
Function Blocks for BL20-1RSxxx 9-2
Function block for BL20-1SSI 9-15

Parameter Gateway – Assignment in Hexadecimal Format 9-22
Parameter 4 9-22
Parameter 5 9-28

Conversion Table Decimal to Hexadecimal 9-34

BL20 Accessories 9-36

10 Glossary

11 Index

About this Manual

Documentation Concept **2**

Overview **3**

Prescribed Use 3
Notes Concerning Planning /Installation of this Product 3

Description of Symbols Used **4**

List of Revisions **5**

Documentation Concept

This manual contains all information about the PROFIBUS-DP-gateway of the BL20-system.

The following chapters contain a short BL20 system description, a description of the field bus system PROFIBUS-DP, exact information about function and structure of the BL20 PROFIBUS-DP gateway as well as all bus specific information concerning the connection to automation devices, the maximum system extension etc.

The bus-independent I/O-modules for BL20 as well as all further fieldbus-independent chapters like mounting, labelling etc. are described in a separate manual.

- BL20 I/O-modules
  (TURCK-Documentation-No.: English D300717)

Furthermore, the manual contains a short description of the project planning and diagnostics software for TURCK I/O-systems, the engineering software I/O-ASSISTANT.

Overview

Attention

Please read this section carefully. Safety aspects cannot be left to chance when dealing with electrical equipment.

This manual includes all information necessary for the prescribed use of BL20 products. It has been specially conceived for personnel with the necessary qualifications.

Prescribed Use

Warning

The devices described in this manual must be used only in applications prescribed in this manual or in the respective technical descriptions, and only with certified components and devices from third party manufacturers.

Appropriate transport, storage, deployment and mounting as well as careful operating and thorough maintenance guarantee the trouble-free and safe operation of these devices.

Notes Concerning Planning /Installation of this Product

Warning

All respective safety measures and accident protection guidelines must be considered carefully and without exception.

Description of Symbols Used

Warning

This sign can be found next to all notes that indicate a source of hazards. This can refer to danger to personnel or damage to the system (hardware and software) and to the facility.

This sign means for the operator: work with extreme caution.

Attention

This sign can be found next to all notes that indicate a potential hazard.

This can refer to possible danger to personnel and damages to the system (hardware and software) and to the facility.

Note

This sign can be found next to all general notes that supply important information about one or more operating steps. These specific notes are intended to make operation easier and avoid unnecessary work due to incorrect operation.

List of Revisions

In comparison to the previous manual edition (08/05), the following changes/ revisions have been made:

Table 1: List of revisions

Chapter	Subject/ Description	new	changed
Chap. 8	BL20-Approvals for Zone 2	X	

Note

The publication of this manual renders all previous editions invalid.

1 BL20 Philosophy

The Basic Concept 2

BL20 Components 6

Gateways.....6
– Gateways with integrated power supply 6
– Gateways without power supply 8
Power Distribution Modules 8
Electronics Modules 9
Base Modules.....11
End Plate 12
End Bracket.....13
Jumpers.....13
Shield Connection (Gateway) 14
Marking Material.....14
Shield Connection, 2-Pole for Analog Modules 15

The Basic Concept

BL20 is a modular I/O system for use in industrial automation. It connects the sensors and actuators in the field with the higher-level master.

BL20 offers modules for practically all applications:

- Digital input and output modules
- Analog input and output modules
- Technology modules (counters, RS232 interface...)

A complete BL20 station counts as one station on the bus and therefore occupies one fieldbus address in any given fieldbus structure. A BL20 station consists of a gateway, power distribution modules and I/O modules.

The connection to the relevant fieldbus is made via the bus-specific gateway, which is responsible for the communication between the BL20 station and the other fieldbus stations.

The communication within the BL20 station between the gateway and the individual BL20 modules is regulated via an internal module bus.

Note

The gateway is the only fieldbus-dependent module on a BL20 station. All other BL20 modules are not dependent on the fieldbus used.

Flexibility

All BL20 stations can be planned to accommodate the exact number of channels to suit your needs, because the modules are available in block and slice design.

A BL20 station can contain modules in any combination, which means it is possible to adapt the system to practically all applications in automated industry.

Compactness

The slim design of the BL20 modules (gateway 50.4 mm / 1.98 inch, slice 12.6 mm / 0.49 inch and block 100.8 mm / 3.97 inch) and their low overall height favor the installation of this system in confined spaces.

Easy to handle

All BL20 modules, with the exception of the gateway, consist of a base module and an electronics module.

The gateway and the base modules are snapped onto a mounting rail. The electronics modules are plugged onto the appropriate base modules.

The base modules are designed as terminal blocks. The wiring is secured by tension clamp or screw connection. The electronics modules can be plugged or pulled when the station is being commissioned or for maintenance purposes, without having to disconnect the field wiring from the base modules.

BL20 Components

For a detailed explanation of the individual BL20 components, please refer to chapter 2 and chapter 4. The “Appendix“ to this manual contains (amongst others) a list of all BL20 components and the assignment of electronics modules to base modules.

Gateways

The gateway connects the fieldbus to the I/O modules. It is responsible for handling the entire process data and generates diagnostic information for the higher-level master and the software tool I/Oassistant.

Gateways with integrated power supply

The BL20 gateways BL20-GWBR-PBDP offer an integrated power supply unit for feeding the gateway and the connected I/O modules.

It is not necessary to supply each individual module with a separate voltage

Figure 1: Gateway BL20-GWBR-PBDP

Gateways without power supply

Note

The gateways without integrated power supply unit need an additional power supply module (bus refreshing module) which feeds the gateway an the connected I/O modules.

Power Distribution Modules

The power supply for gateways and I/O modules is fed to the power distribution modules; therefore, it is not necessary to supply each individual module with a separate voltage.

Figure 2: Power distribution module

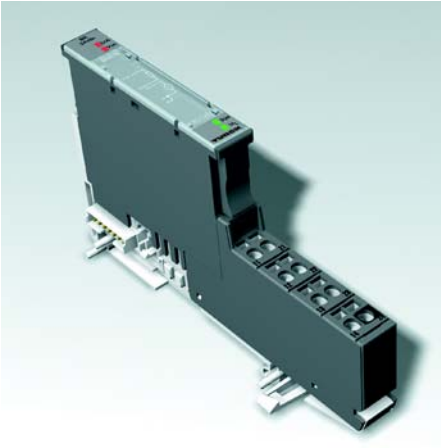

Electronics Modules

Electronics modules contain the functions of the BL20 modules (power distribution modules, digital and analog input/output modules, and technology modules).

Electronics modules are plugged onto the base modules and are not directly connected to the wiring. The assignment table in the Section “Ordering Information“ of the “Appendix“ shows the possible combinations of electronics and base modules. They can be plugged or pulled when the station is being commissioned or for maintenance purposes, without having to disconnect the field wiring from the base modules.

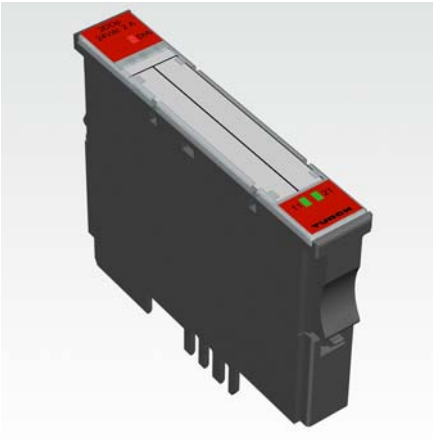

Figure 3: Electronics module in slice design

Figure 4: Electronics module in block design

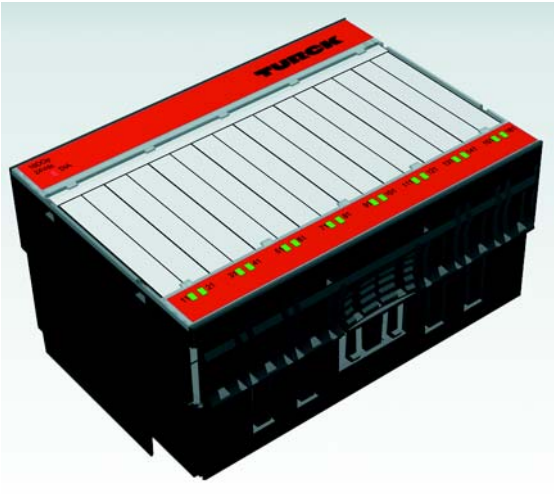

Base Modules

The field wiring is connected to the base modules. These are constructed as terminals in block and slice designs and are available in the following variations with either tension clamp or screw connections: 2-/3-wire (2-channel), 4-wire (2-channel) and 4x 2-/3-wire (4-channel).

The assignment table in the Section “Ordering Information“ of the “Appendix“ shows the possible combinations of electronics and base modules.

Figure 5: Base module with tension clamp connection

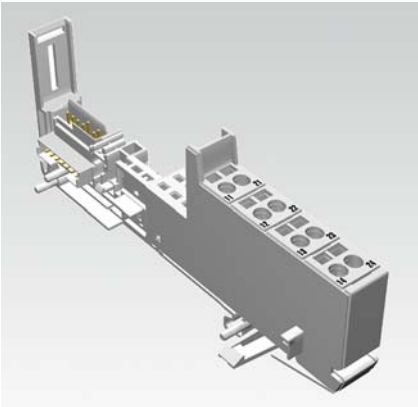

Figure 6: Base module with screw connection

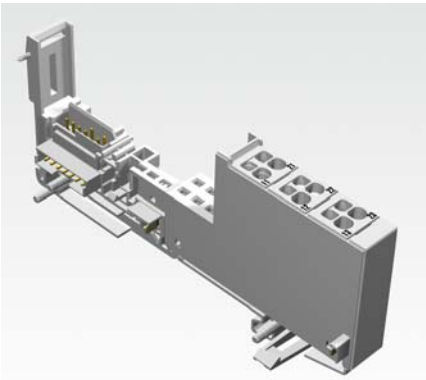

Figure 7:
Base module in block design

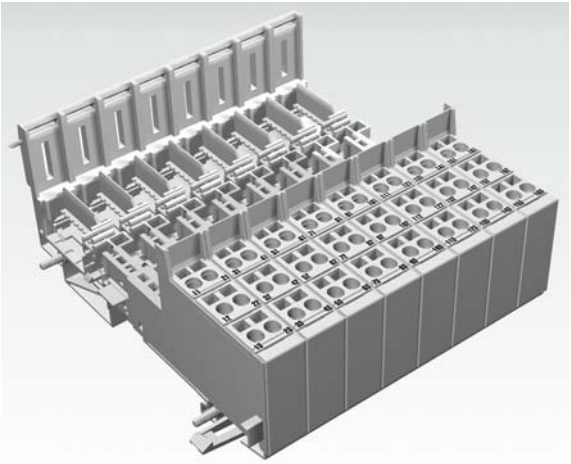

BL20 Economy

With the BL20 Economy modules the electronics and connection technology is integrated into a single housing. Thus, the selection of a base module is unnecessary. Within a station the Economy modules can be combined with the modules with separate electronics/connection technology, provided that the base modules feature tension spring connections.

Abbildung 1:
BL20 Economy

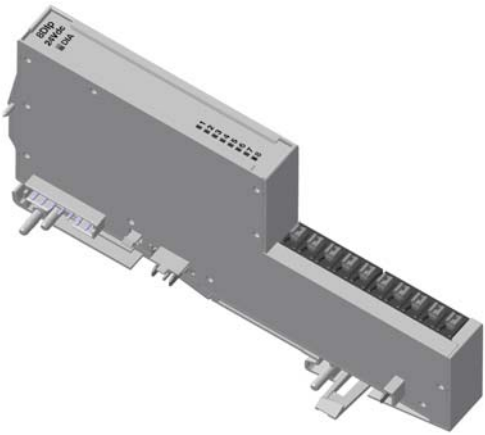

End Plate

An end plate on the right-hand side physically completes the BL20 station. An end bracket mounted into the end plate ensures that the BL20 station remains secure on the mounting rail even when subjected to vibration.

Figure 8: end Plate

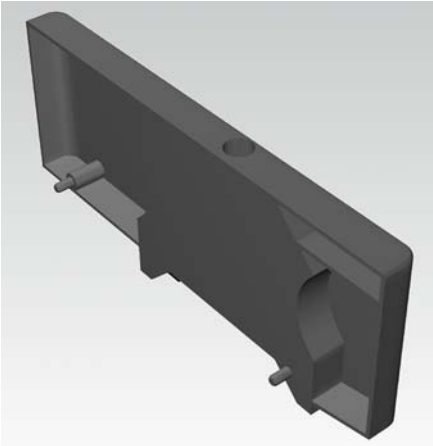

End Bracket

A second end bracket to the left of the gateway is necessary, as well as the one mounted into the end plate to secure the station.

Figure 9: End bracket

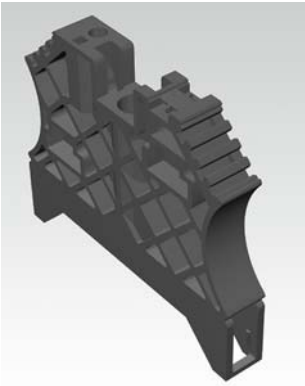

Jumpers

Jumpers (QVRs) are used to bridge a connection level of a 4-wire base module. They can be used to connect potentials in relay modules (bridging the relay roots); thus considerably reducing the amount of wiring.

Figure 10: Jumpers

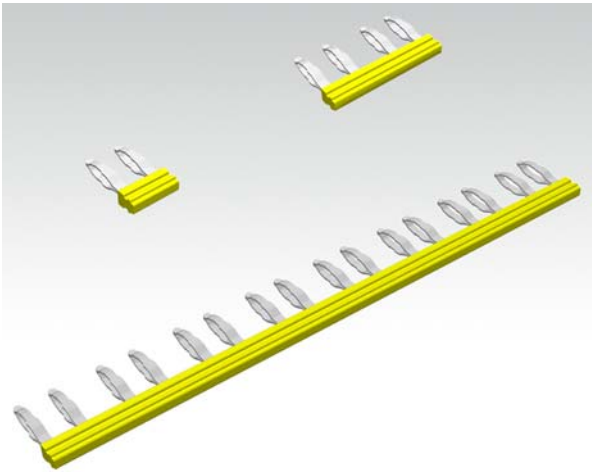

Shield Connection (Gateway)

If the gateway is wired directly to the fieldbus, it is possible to shield the connection using an attachment (BL20-SCH-1)on the gateway.

Figure 11: Shield connection (gateway)

Marking Material

- Labels: for labeling BL20 electronics modules.
- Markers: for colored identification of connection levels of BL20 base modules.

- Dekafix connector markers: for numbering the mounting slots on BL20 base modules.

Figure 12: Marking material

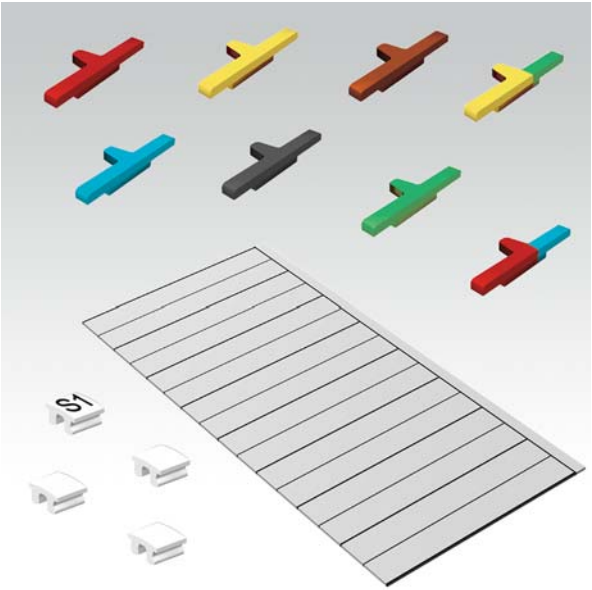

Shield Connection, 2-Pole for Analog Modules

The 2-pole shield connection can be used to connect signal-cable shielding to the base modules of analog input and output modules.

A special tension-clamp operating tool (BL20-ZBW5-2) is required to mount the shield connection onto the base module.

Figure 13:
Shield connection

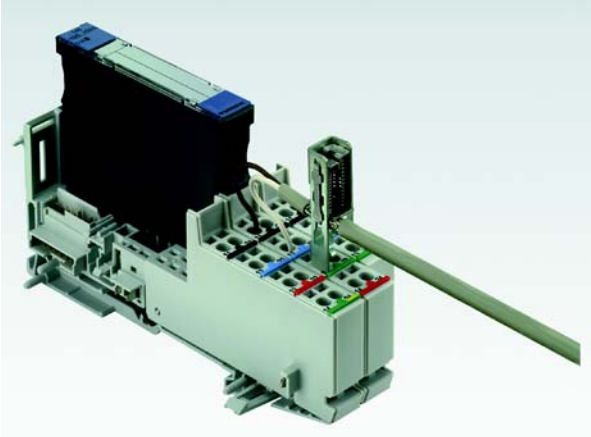

2 PROFIBUS-DP

System overview 2

Master/Slave system 2
System configuration and device types 3
– Single-Master systems 4
– Multi-Master systems 4
Topology 4
Maximum system expansion 5
– Use of Drop lines 6
Transmission rate/Cycle times 6
Transmission cables 6
– Cable types 7
– Installation guidelines 7
– Checking the PROFIBUS cabling 8
Diagnostic functions 9
Sync and Freeze Mode 10
– Sync Mode 10
– Freeze Mode 10
System performance 11
– Data transfer between DPM1 and the DP slaves 11
– Protective mechanisms 12
– Ident. number 14
GSD files 14

System overview

PROFIBUS is a manufacturer-independent and open fieldbus standard for a wide area of applications in factory and process automation. Manufacturer independence and openness are guaranteed by the international standards EN 50170 and EN 50254. PROFIBUS enables communication of devices of various manufacturers without requiring particular interface adaptations.

PROFIBUS-DP (Decentral Periphery) is designed for data transfer between the control and the input/output level. TURCK BL20 stations support PROFIBUS-DP.

PROFIBUS-DP is the speed-optimized PROFIBUS version, specially designed for communication between automation devices and decentralized peripheral devices. PROFIBUS-DP is suited to replace cost-intensive parallel signal transmission via digital and analogue sensors and actuators.

PROFIBUS-DP is based on DIN 19245, part 1 and part 4. During the course of European fieldbus standardization, PROFIBUS-DP has been integrated into the European fieldbus standard EN 50170.

Master/Slave system

PROFIBUS-DP is a master/slave system, which consists of a master (usually integrated in the PLC) and up to 31 slaves per segment. During operation, the master constantly scans the connected slave stations. Several masters may be connected within a single network; this would then be classified as a multi-master system. In this case they pass on their transmission permission (Token Passing).

PROFIBUS-DP uses a bit transmission layer (Physical Layer) based on the industrially proven RS485 standard.

System configuration and device types

PROFIBUS-DP is suited for both mono-master or multi-master system configuration. Thus a high level of flexibility in system configuration is guaranteed. The network comprises 126 devices max. (master or slaves).

Configurable system parameters include the number of stations, the assignment of the station address to the I/O addresses, data consistence of I/O data, format of diagnostic messages and the bus parameters used. Every PROFIBUS-DP system consists of different types of devices.

One distinguishes between three device types:

- DP master class 1 (DPM1)

This is a central control, which exchanges data in a defined message cycle with the remote stations (slaves). Typical devices are, for instance, programmable logic controllers (PLCs) or PCs.

- DP master class 2 (DPM2)

Devices of this type are engineering, configuration or operating devices. They are used during set-up, maintenance and diagnosis, to configure the connected devices, to evaluate parameters and to scan the device status.

- DP slave

A PROFIBUS-DP slave is a peripheral device (I/Os, drives, transducers), which reads input data and provides output data to the periphery. Of course, there are also devices which provide only input or only output data. The input and output data volume depends on the specific device and may comprise up to 246 bytes input data and 246 bytes output data.

Single-Master systems

With mono-master systems merely a single master on the bus is active during bus operation. The PLC is the central control component. The slaves are coupled decentrally to the PLC via the transmission medium. With this type of system configuration the shortest bus cycle times are achieved.

Multi-Master systems

In multi-master operation there are several masters on the bus. These form independent sub-systems, consisting of one DPM1 each and the associated slaves, or additional configuration and diagnostic devices. The slave input and output data can be read by

all DP masters. Writing of outputs is reserved to a single DP master (the assigned DPM1 during configuration). Multi-Master systems achieve an average bus cycle time. In time-critical applications you should monitor the bus cycle time via a connected diagnostic tool.

Topology

PROFIBUS-DP communicates via a shielded 2-wire cable according to the RS485 standard. The network topology accords to a line structure with active bus terminators on both ends.

Maximum system expansion

PROFIBUS-DP is suited for connection of a large number of I/O points. Up to 126 addressable bus nodes enable connection of thousands of analogue and digital I/O points within a network.

PROFIBUS-DP allows a maximum of 32 nodes per segment; please note that masters and repeaters always count as nodes. One segment is defined as the bus section between two repeaters. If no repeaters are used, the entire network corresponds to one segment. Segments must comply with the specified maximum length and the specified transmission rates. Up to nine repeaters, type "REP-DP0002" may be connected within a network. The maximum length of a bus line within a segment and the number of repeaters are listed in the following table.

Table 2: Maximum System expansion PROFIBUS-DP

Communication rate	Length of bus line	Max. no. of repeaters	Max. no. of nodes
9.6 kbps	1200 m	2	126
19,2 kbps	1200 m	2	126
93,75 kbps	1200 m	2	126
187,5 kbps	1000 m	2	126
500 kbps	400 m	4	126
1.5 Mbps	200 m	6	126
12 Mbps	100 m	9	126

Attention

The maximum number of 32 bus nodes may not be exceeded without a repeater.

Use of Drop lines

Note

The length of drop lines may not exceed 6.6 m at a transmission speed of 1.5 Mbps. At a transmission speed of 12 Mbps it is not permitted to use drop lines.

Transmission rate/Cycle times

The transmission rate set by the PROFIBUS-DP master determines the system's transmission speed. Depending on the gateway, the transmission speed can be adjusted in a range of 9,6 kbps up to 12 Mbps.

Transmission cables

The bus nodes are interconnected via fieldbus cables, which accord to RS485 specifications and DIN19 245. The cables must thus have the following characteristics:

Table 3: Characteristics of PROFIBUS-DP transmission cables

Parameters	Cable type A (DIN 19 245 part 3)
Wave resistance	135 to 165 Ω (3 to 20 MHz)
Capacitance	< 30 pF/km
Loop resistance	< 110 Ω/km
Conductor diameter	> 0.64 mm
Conductor cross section	> 0.34 mm^2
Terminating resistors	220 Ω

Attention

The higher the transmission rate, the higher the number of bus nodes and the longer the transmission cables, the more important to observe these parameters.

Figure 14: Schematic PROFIBUS-DP cables

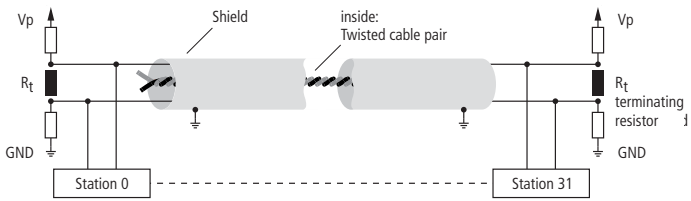

Cable types

The bus cable of the PROFIBUS-DP network is a special shielded twisted data cable according to RS485 standards. The data transmission rate is 12 Mbps max.

Note

Premoulded PROFIBUS-DP cables simplify network installation, shorten set-up times and reduce wiring errors. TURCK offers an extensive and varied product spectrum for this purpose.

The ordering information on the available cable types can be taken from the respective product catalogue.

Installation guidelines

When mounting the modules and routing the cables please observe the technical guidelines of the PROFIBUS user organization concerning PROFIBUS-DP/FMS (see www.profibus.com).

Checking the PROFIBUS cabling

A PROFIBUS cable (or the cable segment if repeaters are used) can be tested with a few resistance measurements. For this the cable should be disconnected from all stations:

- Resistance between "A" and "B" at the beginning of the cable: approx. 110 Ω
- Resistance between "A" and "B" at the end of the cable: approx. 110 Ω
- Resistance between "A" at the beginning and "A" at the end of the cable: approx. 0 Ω
- Resistance between "B" at the beginning and "B" at the end of the cable: approx. 0 Ω
- Resistance between shield at the beginning and shield at the end of the cable: approx. 0 Ω

If these measurements are successful, then the cable can be used according to standards. However, if there are further disturbances on the bus, electromagnetic interference should be considered as cause. Please also observe the installation guidelines of the PROFIBUS user organization (www.profibus.com)

Diagnostic functions

The comprehensive diagnostic functions of PROFIBUS-DP allow fast error localization.

The PROFIBUS-DP diagnosis is divided into three levels:

Table 4: PROFIBUS-DP diagnosis

Type of diagnosis	Description
station-related diagnostics	Messages concerning the general operational readiness of a bus node. Example: "Excessive temperature" or "under-voltage"
Module-related diagnostics	These messages indicate that there is a diagnostic message within the a certain I/O area (e.g. 8 bit output module) of a bus node.
Channel-related diagnostics	Here the error cause of a single input/output bit, i.e. relating to a single channel, is indicated. Example: "Short-circuit at output 2"

The PROFIBUS slaves of the *BL20*series support the diagnostic functions of PROFIBUS-DP.

The evaluation of the diagnostic data via the control depends on the support of the master.

Note

Further information on diagnostics can be taken from the device descriptions of the master interfaces of the various manufacturers.

Sync and Freeze Mode

In addition to the node-specific user data traffic, which is automatically controlled by the DPM1, the DP master has the possibility to send control commands to a slave, a group of slaves, or simultaneously to all DP slaves. These control commands are transmitted as multicast messages.

The Sync and Freeze mode for synchronization of the DP slaves can be determined via the control commands. They enable event-controlled synchronization of the DP slaves.

Sync Mode

The DP slaves initiate the Sync mode upon receipt of a Sync control command from the assigned DP master. In this mode, all addressed DP slaves "freeze" their present output status.
During the following user data transfer cycles, the output data are stored by the DP slaves, while the output states are retained. Only after receipt of the next Sync control command from the master, the stored output data are switched through to the outputs.
The Sync mode is terminated upon an Unsync control command.

Freeze Mode

The Freeze control command induces the addressed DP slaves to assume the Freeze mode. In this mode, the momentary values of the input states are "frozen". Input data will only be updated upon receipt of the next freeze command from the DP master by the affected devices.
The Freeze mode is terminated upon an Unfreeze control command.

System performance

In order to achieve a relatively high level of device interchangeability, the PROFIBUS-DP system performance has also been standardized. It is largely determined by the operating status of the DPM1. This can be either controlled locally or via the bus from the configuration device.

One distinguishes between three major conditions:

Table 5: Operating modes

Operating mode	Description
Stop	There is no data transfer between the DPM1 and the DP slaves. The coupling module merely addresses the modules once after power-up (none of the I/O LEDs illuminate).
Clear	The DPM1 reads the input data of the DP slaves and retains the outputs of the DP slaves in the safe state (depending on the reaction to fieldbus errors, the green I/O LED illuminates and the outputs are set).
Operate	The DPM1 is in the data transfer phase. During cyclic data exchange the inputs of the DP slaves are read and the output information is transferred to the DP slaves (the green I/O LED illuminates).

The DPM1 sends its local status within a configurable time interval via a multi-master command to all assigned DP slaves. The system response to an error in the data transfer phase of the DPM1, e.g. a failure of a DP slave, is determined by the operating parameter "Auto-Clear". If this parameter is set to "True", then the DPM1 switches all outputs of the assigned DP slaves to the safe status, as soon as a DP slave is no longer capable of user data transfer. Then the DPM1 changes to the "Clear" state. If this parameter is set to "False", then the DPM1 will retain its operating condition also in the event of an error and the user can determine the system response.

Data transfer between DPM1 and the DP slaves

Data exchange between the DPM1 and the assigned DP slaves is automatically controlled by the DPM1 in a determined fixed order. During configuration of the bus system, the user assigns the DP

slaves to the DPM1. It is also defined which DP slaves are to be included in or excluded from cyclic user data transfer.

Data exchange between DPM1 and the DP slaves can be divided into the phases parameterization, configuration and data transfer.

Prior to including a DP slave in the data transfer phase, the DPM1 checks during the parameterization and configuration phase, whether the programmed required configuration complies with the actual device configuration. This check is used to verify that the device type, the format and length information as well as the number of inputs and outputs accord. The user thus is securely protected against parameterization errors. Additionally to the user data transfer, which is automatically effected by the DPM1, it is also possible to send new parameters to the DP slaves upon request of the user.

Protective mechanisms

In the decentralized periphery it is required to provide the system with highly effective protective functions against faulty parameterization or failure of the transmission devices. PROFIBUS-DP applies certain mechanisms to monitor the DP master and the DP slaves. These can be described as time monitoring functions. The monitoring interval is determined during system configuration.

Table 6: Protective mechanisms

Protective mechanisms	Description
Of the DP master	The DPM1 controls the user data transfer of the slaves via the Data_Control_Timer. Each assigned slaves has a monitoring timer of its own. The timer actuates if no user data are transferred correctly during a certain time interval. In this case the user is informed on this condition. If automatic error response (Auto_Clear = True) is enabled, the DPM1 terminates the "Operate" status, switches the outputs of the assigned slaves into the safe status and returns to the operating status "Clear".
Of the DP slave	The slave carries out response monitoring to detect master or transmission errors. If there is no data exchange during the response monitoring interval with the associated master, the slave automatically switches the outputs into the safe status. In multi-master system operation, an additional access protection is required for the inputs and outputs of the slaves, in order to ensure that only the authorized master has direct access. The slaves provide an input and output image for all other masters so that this map can be read by any master, even without access token.

Ident. number

Each DP slave and each DPM1 must have an individual ident. number. It is needed so that the DP master can identify the connected devices directly without creating significant protocol overhead. The master compares the ident. numbers of the connected DP devices with the ident. numbers registered in the configuration data of the DPM2. User data transfer will only be started, if the right device types with the right station addresses are connected to the bus. This provides additional protection against configuration errors. The manufacturer specific ident. nos. are determined and assigned by the PROFIBUS user organization (PNO). The PNO governs the ident. nos. together with the GSD files.

GSD files

Each PROFIBUS-DP module has a so-called GSD file (German abbr. for device data base file) that comprises detailed information on the module: I/O data volume, transmission rates, revision status etc. This GSD file is needed to configure the station within the PROFIBUS-DP system.

The GSD files can be downloaded via the TURCK website under www.turck.com.

3 Gateways for PROFIBUS-DP

Introduction 3

Function.....3
Versions.....3
Connections and switches 8

Technical Data..... 10

General Technical Data 10
– Station 10
– Approvals 14
– Base Modules 15
Structure Diagram for the Gateways.....16
Technical Data for BL20-GWBR-PBDP 17
Technical Data for BL20-GW-PBDP-1.5MB/
BL20-GW-PBDP-1.5MB-S/ BL20-GW-PBDP-12MB and
BL20-GW-PBDP-12MB-STD: 18
– Gateway 1.5 MBaud (BL20-GW-PBDP-1.5MB) 19
– Gateway 12 MBaud (BL20-GW-PBDP-12MB) 19

Fieldbus Connections 20

Fieldbus Connection via SUB-D Female Connectors 20
Fieldbus Connection via Direct Wiring (only for 1.5 MBaud Gateway) 22

Service Interface Connection 23

Connection Using a BL20 Cable.....23
Connection Using Commercially Available Cables 25

Address Setting 27

Setting Parameters..... 29

Gateway Parameters.....29
Module parameters 36
Module Description in the Electronic Device Data Sheets (GSD) 61
– Standard module description 61
– Module description according to type 62
– Options by the descriptions of modules: 62
Example of a PROFIBUS-DP Configuration.....63
– System description 64
– Parameter Configuration Data 65
– Configuration Data 66

– Diagnostics data 69

Status Indicators/Diagnostic Messages Gateway..... 70

Diagnostic Messages via LEDs 70
Diagnostic Messages via the Software 74

Diagnosis 75

Device Related diagnosis 76
Device-/ identifier - and channel specific diagnosis 77
Description of the Gateway Diagnosis Bits 79
Module diagnosis 82
– Device related diagnosis messages 82
– Channel specific diagnosis messages 91

Introduction

This chapter contains a description of BL20 gateways for the standardized fieldbus PROFIBUS-DP. The chapter is divided up as follows: a description of functions, general and specific technical data, a description of addressing and status displays, and parameter assignment.

Function

BL20 gateways enable BL20 modules to operate on PROFIBUS-DP. A gateway is the connection between the BL20 modules and the PROFIBUS-DP master. It regulates the process data between the

I/O level and the fieldbus, and generates diagnostics data for the higher-level master. Information is made available to the software tool I/O-ASSISTANT via the service interface.

Note

BL20 gateways can only be used as slaves.

When the BL20 gateway has the “WAIT_PRM” status, it is not possible to check the parameters in the parameter telegram of the PROFIBUS-DP master due to the large number of module combinations and module variants. This check is performed after successful configuration by the PROFIBUS-DP master in the context of the configuration.

Versions

The BL20 gateways for the PROFIBUS fieldbus system are available in 5 different versions:

- BL20-GWBR-PBDP:
  This gateway has a maximum transmission rate of 12 MBit/s. The complete functionality of the BL20-GW-PBDP gateways is provided. The connection to the PROFIBUS-DP fieldbus is made through a SUB-D connector.
  In addition, a supply unit has been integrated into the gateway, which means, no supplementary power supply module is needed.

- BL20-GW-PBDP-1.5MB:
  This gateway hax a maximum transmission rate of 1.5 MBit/s. As an alternative to the SUB-D connection, the PROFIBUS-DP fieldbus can also be wired up through tension clamp connectors.
- BL20-GW-PBDP-1.5MB-S:
  This gateway hax a maximum transmission rate of 1.5 MBit/s. As an alternative to the SUB-D connection, the PROFIBUS-DP fieldbus can also be wired up through screw terminals.
- BL20-GW-PBDP-12MB:
  This gateway has a maximum transmission rate of 12 MBit/s. The connection to the PROFIBUS-DP fieldbus is made through a SUB-D connector.
- BL20-GW-PBDP-12MB-STD:
  This gateway is an Gateway with a maximum transmission rate of 12 MBit/s, but with restricted functionality. It only supports a maximum of 4 BL20 I/O modules in block design or a maximum of 15 BL20 modules in total (including power distribution modules and planned empty slots). The connection to the PROFIBUS-DP fieldbus is made through a SUB-D connector.

Note

Please observe that the following I/O modules are not supported by the standard gateway BL20-GW-PBDP-12MB-STD:

BL20-4DI-NAMUR,
BL20-32DO-24VDC-0.5A-P,
BL20-4AI-U/I,
BL20-1RS232,
BL20-1RS485/422,
BL20-1SSI and
all motor starters.

Attention

The Gateway types BL20-GW-PBDP-1.5MB , BL20-GW-PBDP-1.5MB-S, BL20-GW-PBDP-12MB and BL20-GW-PBDP-12MB-STD do not have an internal supply unit! Install a bus refreshing module with the corresponding base module as the first module after the gateway!

Figure 15: Gateway BL20-GWBR-PBDP

A *Service interface*
B *Type designation*
C *LEDs for BL20 module bus*
D *LEDs for PROFIBUS-DP*
E *Screw connections for the system supply voltage*
F *PROFIBUS-DP, SUB-D socket*
G *Screw connections for the field-bus supply voltage*
H *Rotary decimal encoding switch for the fieldbus address*

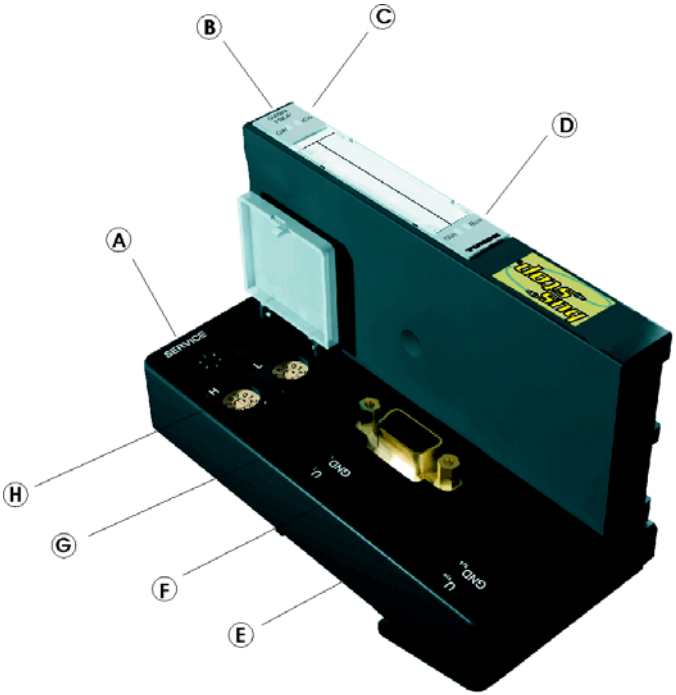

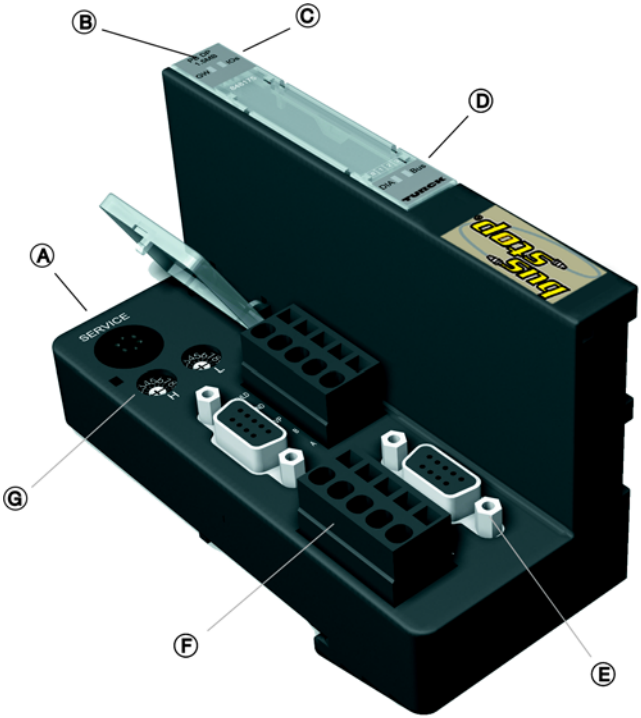

Figure 16:
1.5 MBaud Gateway

A *Service interface*
B *Type designation*
C *LEDs for BL20 module bus*
D *LEDs for PROFIBUS-DP*
E *PROFIBUS-DP, direct wiring (tension clamp connection)*
F *PROFIBUS-DP, SUB-D female connectors*
G *Hexadecimal rotary coding-switch for fieldbus addressing*

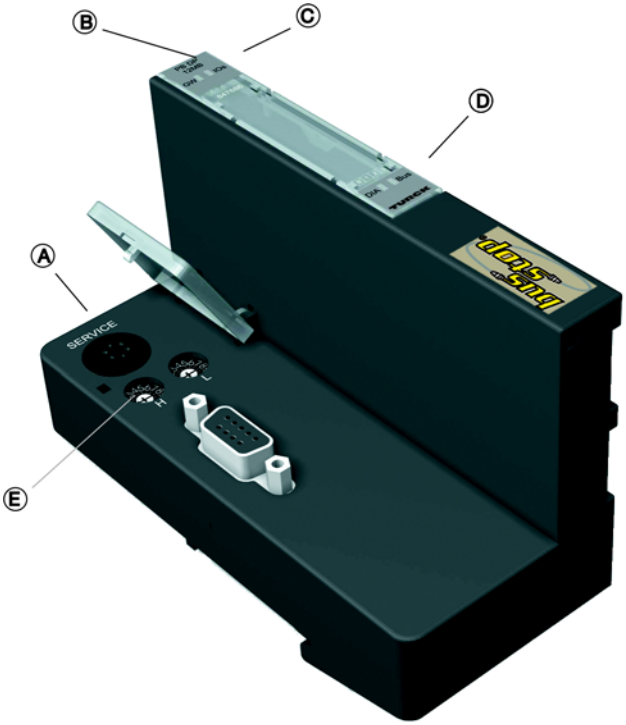

Figure 17: Gateway, 12 MBaud

A *Service interface*
B *Type designation*
C *LEDs for BL20 module bus*
D *LEDs for PROFIBUS DP*
E *Hexadecimal rotary coding-switch for fieldbus addressing*

Connections and switches

The gateways have the following connection and setup options through switches:

PS/2 socket:

This is the Service interface for the connection of the gateway to the software tool I/Oassistant. The user can utilize this software to parameterize and configure the BL20 stations, and to perform diagnoses. The interface is physically implemented as a 6-pole mini-DIN connector (socket). To make the connection to the serial interface on a PC, you can use a special Moeller connecting cable or normal commercial keyboard and adapter cables.

Rotary hex encoding switch/decimal encoding switch:

These are used to set the station address.

9-pole SUB-D socket:

Direct plug connection between the gateway and PROFIBUSDP. In order to implement the extension through the fieldbus, a special SUB-D connector must be used (for example: Turck D9T451-4M).

Note

Please note that the special SUB-D connector should include 4 inductors (each 100 nH to 110 nH) in the P and N leads (recommendation from the PROFIBUS user organization). The termination of a fieldbus cable type A or type B is also made only in the connector. The BL20 gateway itself has no provision for a fieldbus termination.

Terminal strips:

The type of connection to the PROFIBUS-DP fieldbus is provided by BL20-GW-PBDP-1.5MB as tension spring connections and by BL20-GW-PBDP-1.5MB-S as screw connections.

Supply terminals

The BL20-GWBR-PBDP includes an integrated supply unit and additional terminals for connecting the:

- Field supply voltage (U_L, GND_L)
- System supply voltage (U_{Sys}, GND_{Sys})

Other gateway variations must be supplied from a neighboring supply module (BL20-BR-24VDC-D)!

Note

If the BL20 gateway is the last station in the bus structure, the bus termination must be connected externally. This external connection can be either realized by a separate terminating resistor or by a special SUB-D connector with an integrated bus termination. The exact function and mode of operation of the possible individual bus connections are explained in detail in chapter 3.

Technical Data

General Technical Data

Station

Note

The auxiliary power supply must comply with the stipulations of SELV (Safety Extra Low Voltage) according to IEC 364-4-41.

Table 7: General technical data (station)

Supply voltage/ auxiliary voltage	
Nominal value (provision for other modules)	24 V DC
Permissible range	according to EN 61131-2 (18 to 30 V DC)
Residual ripple	according to EN 61131-2
Potential isolation	Yes, via optocoupler
Ambient conditions	
Ambient temperature	
– $t_{Ambient}$	0 to +55 °C / 32 to 131 °F
– t_{Store}	25 to +85 °C / 13 to 185 °F
Relative humidity	according to IEC 61 131-2/ EN 50 178
Climatic tests	according to IEC 61131-2
Noxious gas	– SO^2: 10 ppm (rel. humidity < 75 %, non-condensing) – H_2S: 1.0 ppm (rel. humidity < 75 %, non-condensing)

Resistance to vibration according to IEC 61131-2	
10 to 57 Hz, Constant amplitude 0.075 mm / 0.003 inch, 1g	Yes
57 to 150 Hz, Constant acceleration 1 g	Yes
Mode of vibration	Frequency sweeps with a change in speed of 1 Octave/min
Period of oscillation	20 frequency sweeps per axis of coordinate
Shock resistant according to IEC 68-2-27	18 shocks, sinusoidal half-wave 15 g peak value/11 ms, in each case in +/- direction per space coordinate
Resistance to repetitive shock according to IEC 68-2-29	1 000 shocks, half-sinus 25 g peak value/6 ms, in each case in +/- direction per space coordinate
Topple and fall according to IEC 68-2-31 and free fall according to IEC 68-2-32	
Weight	< 10 kg
Height of fall	1.0 m / 39.37 inch
Weight	10 to 40 kg
Height of fall	0.5 m / 19.69 inch
Test runs	7
Device with packaging, electrically tested printed-circuit board	

Electromagnetic compatibility (EMC) according to EN 50 082-2 (Industry)	
Static electricity according to EN 61 000-4-2	
– Discharge through air (direct)	8 kV
– Relay discharge (indirect)	4 kV
Electromagnetic HF fields according to EN 61 000-4-3 and ENV 50 204	10 V/m
Conducted interferences induced by HF fields according to EN 61 000-4-6	10 V
Fast transients (Burst) according to EN 61 000-4-4	
Interference criteria A: unrestricted operation, normal operating behavior	1 kV
Interference criteria B: temporary interference, normal operation possible	2 kV
Emitted interference according to EN 50 081-2 (Industry)	according to EN 55 011 Class A, Group 1

Reliability	
Operational life MTBF	min. 120000 h
Electronic modules pull/ plug cycles	20
Tests according to EN 61 131-2	
Cold	DIN IEC 68-2-1, temperature -25 °C / -13 °F, duration 96 h; not in use

Dry heat	DIN IEC 68-2-2, Temperature +85 °C / 185 °F, duration 96 h; device not in use
Damp heat, cyclic	DIN IEC 68-2-30, temperature +55 °C / 131 °F, duration 2 cycles every 12 h; device in use
Temperature change	DIN IEC 68-2-14, temperature 0 to +55 °C / 32 to 131 °F, duration 2 cycles, temperature change per minute; device in use
Pollution severity according to IEC 664 (EN 61 131-2)	2
Protection class according to IEC 529	IP20

Warning

This device can cause radio disturbances in residential areas and in small industrial areas (residential, business and trading). In this case, the operator can be required to take appropriate measures to suppress the disturbance at his own cost.

Approvals

Table 8: Approvals

Approvals
CE
CSA
UL

Base Modules

Table 9: technical data for base modules

Protection class	IP 20
Measurement data according to VDE 0611 Part 1/8.92/ IEC 947-7-1/1989	
Rated voltage	250 V
Rated current	17.5 A
Rated surge	4 kV
Pollution severity	2
Insulation stripping length	8 mm / 0.32 inch
Max. wire range	0.5 to 2.5 mm^2 / 0.0008 to 0.0039 $inch^2$ / 20 to 12 AWG
Crimpable wire	
“e” solid core H 07V-U	0.5 to 2.5 mm^2 / 0.0008 to 0.0039 $inch^2$ / 20 to 12 AWG
“f” flexible core H 07V-K	0.5 to 1.5 mm^2 / 0.0008 to 0.0023 $inch^2$ / 20 to 16 AWG
“f” with ferrules according to DIN 46228/1 (ferrules crimped gas-tight)	0.5 to 1.5 mm^2 / 0.0008 to 0.0023 $inch^2$ / 20 to 16 AWG
Plug gauge according to IEC 947-1/1988	A1
TOP connection technology	Tension clamp or screw connection

Structure Diagram for the Gateways

The BL20 gateway has the following structure:

Figure 18: Gateway structure

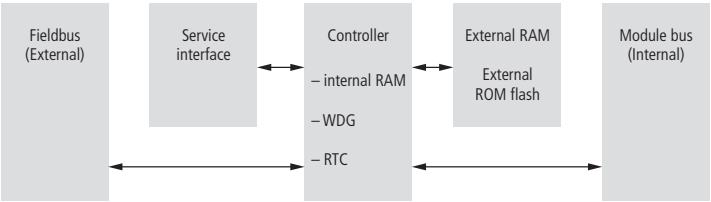

Technical Data for BL20-GWBR-PBDP

Table 10: Technical Data BL20-GWBR-PBDP

Field supply	
U_L Nominal value (range)	24 V DC (18 to 30 V DC)
I_L max. field current	10 A
Isolation voltage (U_L to U_{SYS}/ U_L to fieldbus/U_L to FE)	500 V_{eff}
Connections	2-pole screw terminal
System supply	
U_{SYS} nominal value (range)	24 V DC (18 to 30 V DC)
I_{SYS} (for I_{MB} = 1.2 A/ U_{SYS} = 18 V DC)	max. 900 mA
IMB (supply to the module bus participants)	1.5 A
Isolation voltage (U_{SYS} to U_L/ U_{SYS} to fieldbus/U_{SYS} to FE)	500 V_{eff}
Connections	2-pole screw terminal
Physical interfaces	
Fieldbus	Transfer rate 9.6 kbps to 12 Mbps
Passive optical-fiber adapters can be connected	Current drawn: max. 100 mA
Isolation voltage (fieldbus to U_{SYS}/ fieldbus to U_L/ fieldbus to FE)	500 V_{eff}
Fieldbus connections	1x9-pole SUB-D socket connector
Fieldbus shielding connection	via SUB-D plug

Technical Data for BL20-GW-PBDP-1.5MB/ BL20-GW-PBDP-1.5MB-S/ BL20-GW-PBDP-12MB and BL20-GW-PBDP-12MB-STD:

Table 11: General Technical Data

Supply voltage	
Nominal value	5 V DC (distribution by the Bus Refreshing module)
Permissible range	4.7 to 5.3 V DC
Residual ripple	according to EN 61 131-2
Current consumption on the module bus	
Without service/without fieldbus	~ 280 mA
Without service/with fieldbus (9.6 kBaud)	~ 360 mA
Without service/with fieldbus (1.5 MBaud)	~ 380 mA
Without service/with fieldbus (12 MBaud)	~ 410 mA
With service/without fieldbus	~ 300 mA
Maximum	~ 430 mA
Dimensions	
Width/length/height (mm/inch)	50.6 x 114.8 x 74.4 / 1.99 x 4.52 x 2.93
Diagnostics interface	PS/2 female connector

Gateway 1.5 MBaud (BL20-GW-PBDP-1.5MB)

Table 12: Gateway 1.5 MBaud

Fieldbus connection technology	2 x 9-pole SUB-D female connectors, 2 x LPZF tension clamp terminal blocks, 5.08, 5-pole or 2 x screw connections
Fieldbus shield connection	SCH-WINBLOC
Transmission speed	9.6 kBit/s to 1.5 Mbit/s
Fieldbus termination	SUB-D connector
Passive LWL adapters can be connected	Current consumption max. 100 mA
2 hexadecimal rotary coding-switches with labeling for addressing.	

Gateway 12 MBaud (BL20-GW-PBDP-12MB)

Table 13: Gateway 1.5 MBaud

Fieldbus connection technology	1 x 9-pole SUB-D female connector
Fieldbus shield connection	via SUB-D male connector
Transmission speed	9.6 kBit/s to 12 Mbit/s
Fieldbus termination	SUB-D connector
Passive LWL adapters can be connected	Current consumption max. 100 mA
2 hexadecimal rotary coding-switches with labeling for addressing.	

Fieldbus Connections

Fieldbus Connection via SUB-D Female Connectors

SUB-D female connectors are provided for gateway communication via the PROFIBUS-DP fieldbus.

- BL20-GWBR-PBDP = 1 x SUB-D
- BL20-GW-PBDP-1.5MB/
  BL20-GW-PBDP-1.5MB-S = 2 x SUB-D
- BL20-GW-PBDP-12MB/
  BL20-GW-PBDP-12MB-STD = 1 x SUB-D

Note

Use only SUB-D connectors which are certified as per PROFIBUS standard.

Attention

The 12 MBaud gateway needs a specially shielded SUB-D connector certified as per PROFIBUS standard (for example D9T451-2M) to establish the fieldbus connection.

The pin assignment of the female connectors is identical. The following is an example:

Figure 19: SUB-D female connector on the gateway (top view)

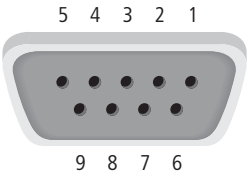

Table 14: Pin assignment of SUB-D female connector on gateway

Pin No.	Signal name	Labeling when wiring directly	Description
1	PE	SHLD	Shield connection/ protective earth
2	not assigned		
3	RxD/TxD-P	B	Reception/transmission-data-P
4	CNTR-P/RTS		Request to send
5	DGND	DGND	Data reference potential
6	VP	VP	+ 5 V DC for external bus termination
7	not assigned		
8	RxD/TxD-N	A	Reception/transmission-data-N
9	not assigned		

Note

The fieldbus shielding is established via the metal hood of the male SUB-D connector.

Fieldbus Connection via Direct Wiring (only for 1.5 MBaud Gateway)

The 1.5 MBaud gateway can be connected to the fieldbus by using either a SUB-D connection or by direct wiring. Two terminal strips are optionally available with tension clamp or screw connections for direct wiring.

Figure 20: Gateway 1.5 MBaud – direct wiring to PROFIBUS-DP

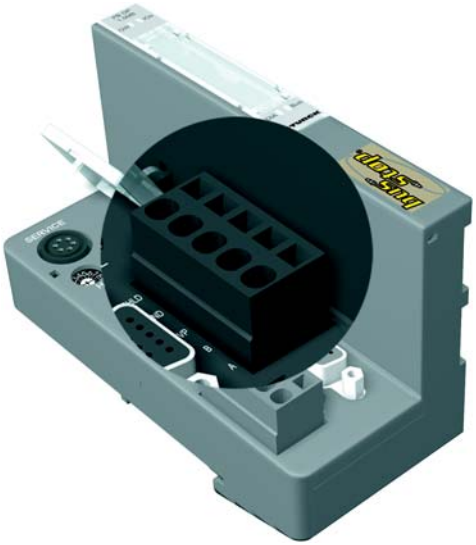

When connecting to PROFIBUS-DP via direct wiring, the shield can be connected using a shield connection. The installation of the shield connection is described in chapter 6.

Note

Equipotential bonding impedance ≤1/10 shielding impedance

Service Interface Connection

Two types of cable can be used to connect the service interface to a PC for the purpose of using I/O-ASSISTANT(project planning and diagnostics software).

- BL20 connection cable (BL20-PS2-Cable)
- Commercially available PS/2 cable with adapter cable

The pin assignments differ in these two options.

Connection Using a BL20 Cable

BL20 cables have a PS/2 male connector (connection for female connector on gateway) and a SUB-D female connector (connection for male connector onPC).

Figure 21: PS/2 male connector on the connection cable to the gateway (top view)

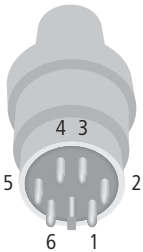

Figure 22: 9-pole SUB-D female connector on the cable for connecting to PC (top view)

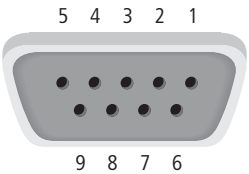

The table below shows the pin assignment when using a PS/2 cable and adapter:

Table 15: Pin assignment when using PS/2 cable and adapter

A *This connection is not supported by all adapter cables.*

	PS/2			**9-pole serial interface on PC**
Pin	Standard PS/2 male connector	BL20 Gateway PS/2 female connector	Pin	Male connector
1	CLK	+5V Gw	4, 6 **A**	DTR, DSR
2	GND	GND	5	GND
3	DATA	–	–	–
4	n.c. (DATA2)	TxD	2	RxD
5	+5V	/CtrlMode	7	RTS
6	n.c. (CLK2)	RxD	3	TxD

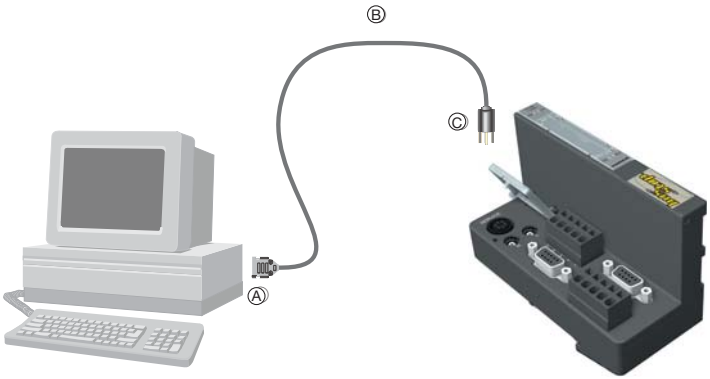

Figure 23: BL20 connection cable connecting a PC and a BL20 gateway

A *SUB-D female connector*
B *BL20 connection cable*
C *PS/2 male connector*

Connection Using Commercially Available Cables

A further possibility to connect PC and BL20 gateway is to use a commercially available connection and adapter cable.

The following two cables are necessary:

- 1 x PS/2 cable (PS/2 male connector/PS/2 male connector) (commercially available keyboard extension cable)
- 1 x adapter cable (PS/2 female connector/SUB-D female connector) (commercially available extension cable for a PC mouse)

Figure 24: PS/2 female connector on the gateway (top view)

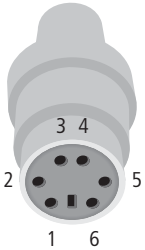

Figure 25: 9-pole SUB-D male connector on PC (top view)

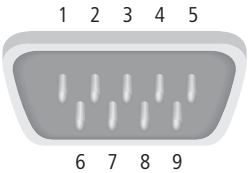

The following graphic of a PS/2 male connector / PS/2 male connector connection is a 6-wire 1:1 connection.

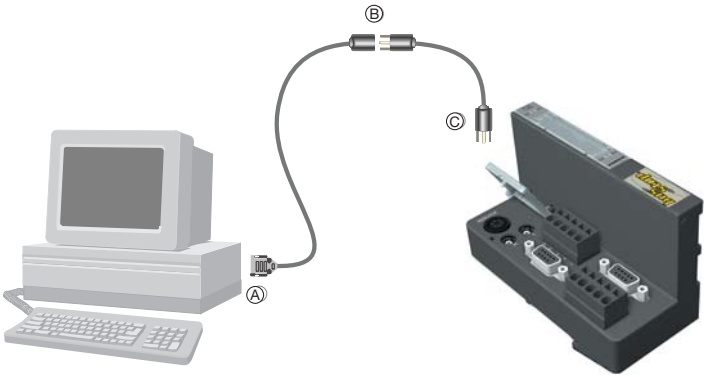

Figure 26: Connection between PC and BL20 gateway using a commercially available cable

A *SUB-D female connector*
B *PS/2 female connector <–> PS/2 male connector*
C *PS/2 male connector*

Address Setting

The address setting for the BL20-GWBR-PBDP is made through the two rotary **decimal** encoding switches.

The address setting for the gateways:

- BL20-GW-PBDP-1.5MB
- BL20-GW-PBDP-1.5MB-S
- BL20-GW-PBDP-12MB
- BL20-GW-PBDP-12MB-STD

in a PROFIBUS structure is made through the two rotary hex encoding switches.

The switches can be found beneath a cover, below the service interface.

Figure 27: Hexadecimal rotary coding-switches for address setting on PROFIBUS-DP

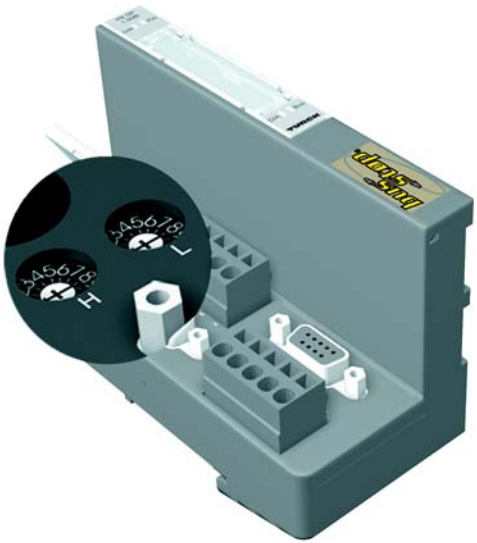

Attention

A maximum of 125 addresses (001 to 125) can be allocated. Each address may be allocated only once in the entire bus structure.

The bus addresses 000, 126 and 127 must not be allocated.

The rotary encoding switches are marked with H for High (more significant digit) and L für Low (less significant digit).

BL20-GWBR-PBDP:

- The L switch is used to set L × 10^0 (L = 0 to 9).
- The H switch is used to set L × 10^1 (H = 0 to 9)

Note

The ADDRESS switch on the BL20-GWBR-PBDP can be used to assign addresses from 1 to 99.

BL20-GW-XXX:

- The L switch is used to set L × 16^0 (L = 0 to F).
- The H switch is used to set L ×16^1 (H = 0 to F).

  A conversion table for converting station addresses from decimal to hexadecimal can be found in the “Appendix“.

Note

The cover of the hexadecimal rotary coding-switches must be closed after use.

It is not necessary to address the internal module bus.

Attention

If the BL20 gateway is used as the first or last station in the bus communication, then a special bus connector with a built-in or switched-in termination resistor is absolutely necessary.

The maximum bus structure for PROFIBUS-DP as well as detailed data for connecting gateways to PROFIBUS-DP are described in chapter 3.

Setting Parameters

Gateway Parameters

BL20 gateways for PROFIBUS-DP require five parameter bytes. These describe exclusively the behavior of the gateway itself. The first three parameters are defined by the PROFIBUS-DP standard.

Description and allocation of gateway parameters:

The texts in the columns “Parameter name“ and “Meaning“ correspond to those determined in the GSD files (Electronic Device Data Sheets), which are described in chapter 3.

Table 16: Gateway parameters

A *Standard default settings*

Parameter name	Value	Meaning
Parameter 1 - 3:		
Reserved		**0x00**, **0x00**, **0x00**, 0x00, 0x00
Parameter 4:		
Module bus station		0x00, 0x00, 0x00, **0x00**, 0x00
– Outputs module exchange		
	Output 0 **A**	The gateway switches the outputs of modules to “0”. No error information is transmitted.

A *Standard default settings*

Output substitute value	The gateway switches the outputs of all modules (with the exception of analog output modules) to “0”. Error information is transmitted to the analog output modules. Depending on their configuration, these modules set their outputs either to “0” or to a default value, or to maintain the original values. The non-configured analog output modules set their outputs to “0”.
Hold current value	The gateway maintains the actual output settings of all modules (with the exception of analog output modules). Error information is transmitted to the analog output modules. Depending on their configuration, these modules set their outputs either to “0” or to a default value, or maintain the original values. The non-configured analog output modules maintain their current output settings.
Exchange process dat	The gateway carries on exchanging process data with the other module bus stations. No error information is transmitted.

A *Standard default settings*

– Outputs module exchange error:

Output 0 **A**	The gateway switches the outputs of the modules to “0”. No error information is transmitted.
Output substitute value	The gateway switches the outputs of all modules (with the exception of analog output modules) to “0”. Error information is transmitted to the analog output modules. Depending on their configuration, these modules set their outputs either to “0” or to a default value, or maintain the original values. The non-configured analog output modules set their outputs to “0”.
Hold current value	The gateway maintains the actual output settings of all modules (with the exception of analog output modules). Error information is transmitted to the analog output modules. Depending on their configuration, these modules set their outputs either to “0” or to a default value, or maintain the original values. The non-configured analog output modules maintain their current output settings.
Exchange process data	The gateway carries on exchanging process data with the other module bus stations. No error information is transmitted.

A *Standard default settings*

– Outputs fieldbus error:

Output 0 **A**	The gateway switches the outputs of the modules to “0”. No error information is transmitted.
Output substitute value	The gateway switches the outputs of all modules (with the exception of analog output modules) to “0”. Error information is transmitted to the analog output modules. Depending on their configuration, these modules set their outputs either to “0” or to a default value, or maintain the original values. The non-configured analog output modules set their outputs to “0”.
Hold current value	The gateway maintains the actual output settings of all modules (with the exception of analog output modules). Error information is transmitted to the analog output modules. Depending on their configuration, these modules set their outputs either to “0” or to a default value, or maintain the original values. The non-configured analog output modules maintain their current output settings.

A *Standard default settings*

Parameter 5:		
Gateway		0x00, 0x00, 0x00, 0x00, **0x00**
– Integer data format		
	LSB first **A**	Data is converted to INTEL format (standard format).
	MSB first	16-bit data are transmitted with the high and low bytes reversed. This parameter influences the process data!
– Diagnostics from modules		
	Activate **A**	Diagnostic messages from the module bus stations are made known to the fieldbus master as extended diagnostics.
	Deactivate	Diagnostic messages from the module bus stations will not be displayed. A station diagnostic is not automatically generated along with module diagnostics.

A *Standard default settings*

– Station configuration		
	Do not allow changes	When commissioning the BL20 station, the actual list of modules must match exactly the module list planned in the configuration software of the master.
	Allow changes	When the BL20 station is put into operation by the fieldbus master, the actual list of modules can differ slightly from the list of modules planned in the configuration software of the master: – Free slots exist in the actual configuration where modules have been planned. These free slots are reserved for the planned modules. – Modules are mounted in the actual configuration where free slots have been planned. These modules will be ignored by the gateway.
– I/O-ASSISTANTForceMode		
	Release **A**	I/O-ASSISTANTcan set the force mode.
	Block	I/O-ASSISTANTcannot set the force mode, if the station was parameterized by the DP master.

A *Standard default settings*

– Gateway diagnostics		
	device related diagnostics **A**	The „device related diagnostic format“ is used: 2 bytes gateway diagnostics + diagnostic bytes for all modules of the station which are capable for diagnostic
	dev./identifier/ channel-diagn.	The device, identifier and channel related diagnostic format according to PROFIBUS standard is used: 2 bytes gateway diagnostic + 1 diagnostic bit for each connected module + active diagnostic blocks for the modules of the station which are capable for diagnostic

Module parameters

The texts in the columns “Parameter names“ and “Meaning“ correspond to those determined in the GSD files (Electronic Device Data Sheets), which are described in chapter 3.

Table 17: Module parameters

A *default settings*

Assignment			Parameter name	Value	Meaning
Channel	Byte	Bit			
– BL20-4DI-NAMUR					
0 to 3	0 to 3	0	Input filter x	0 1	– deactivated (input filter 0,25 ms) **A** – activated (input filter 2,5ms)
		1	Digital input x	0 1	– normal **A** – inverted
		2	Short-circuit monitoring x	0 1	– deactivate **A** – activate
		3	Short circuit diagnosis x	0 1	– deactivate **A** – activate
		4	Open circuit monitoring x		– deactivate **A** – activate
		5	Open circuit diagnosis x		– deactivate **A** – activate
		6	Input on diagnostic x		– output substitute value **A** – hold current value
		7	Substitute value on diag x		– off **A** – on

Assignment			Parameter name	Value	Meaning
Channel	Byte	Bit			
– BL20-1AI-I(0/4...20MA)					
0	0	0	Current mode	0 1	– 0...20mA **A** – 4...20mA
		1	Value representa-tion	0 1	– Integer (15Bit + sign) **A** – 12Bit (left-justified)
		2	Diagnostic	0 1	– release **A** – block
– BL20-2AI-I(0/4...20MA)					
0/1	0/1	0	Current mode	0 1	– 0...20mA **A** – 4...20mA
		1	Value representa-tion	0 1	– Integer (15Bit + sign) **A** – 12Bit (left-justified)
		2	Diagnostic	0 1	– release **A** – block
		3	Channel K1	0 1	– activate **A** – deactivate

A *Standard default settings*

Assignment			Parameter name	Value	Meaning
Channel	Byte	Bit			
– BL20-1AI-U(-10/0...+10VDC)					
0	0	0	Voltage mode	0 1	– 0...10V **A** – -10...+10V
		1	Value representa-tion	0 1	– Integer (15Bit + sign) **A** – 12Bit (left-justified)
		2	Diagnostic	0 1	– release **A** – block
– BL20-2AI-U(-10/0...+10VDC)					
0/1	0/1	0	Voltage mode	0 1	– 0...10V **A** – -10...+10V
		1	Value representa-tion	0 1	– Integer (15Bit + sign) **A** – 12Bit (left-justified)
		2	Diagnostic	0 1	– release **A** – block
		3	Channel K1	0 1	– activate **A** – deactivate

A *Standard default settings*

Assignment			Parameter name	Value	Meaning
Channel	Byte	Bit			
– BL20-2AI-PT/NI-2/3					
0	0	0	Mains suppression K1	0 1	– 50Hz **A** – 60Hz
		1	Value representa-tion K1	0 1	– Integer (15Bit + sign) **A** – 12Bit (left-justified)
		2	Diagnostic K1	0 1	– release **A** – block
		3	Channel K1	0 1	– activate **A** – deactivate
	0	4 to 7	Element K1	0000 0001 0010 0011 0100 0101 0110 0111 1000 1001 1010 1001 1100 1101 1110 1111	– PT100, -200..850°C **A** – PT100, -200..150°C – NI100, -60..250°C – NI100, -60..150°C – PT200, -200..850°C – PT200, -200..150°C – PT500, -200..850°C – PT500, -200..150°C – PT1000, -200..850°C – PT1000, -200..150°C – NI1000, -60..250°C – NI1000, -60..150°C – Resistance, 0..100 Ω – Resistance, 0..200 Ω – Resistance, 0..400 Ω – Resistance, 0..1000 Ω
	1	0	Measure-ment Mode K1	0 1	– 2-wire **A** – 3-wire

A *Standard default settings*

Assignment			Parameter name	Value	Meaning
Channel	Byte	Bit			
1	2	0	Mains suppression K1	0 1	– 50Hz **A** – 60Hz
		1	Value representation K1	0 1	– Integer (15Bit + sign) **A** – 12Bit (left-justified)
		2	Diagnostic K1	0 1	– release **A** – block
		3	Channel K1	0 1	– activate **A** – deactivate
	2	4 to 7	Element K2	0000 0001 0010 0011 0100 0101 0110 0111 1000 1001 1010 1001 1100 1101 1110 1111	– PT100, -200..850°C **A** – PT100, -200..150°C – NI100, -60..250°C – NI100, -60..150°C – PT200, -200..850°C – PT200, -200..150°C – PT500, -200..850°C – PT500, -200..150°C – PT1000, -200..850°C – PT1000, -200..150°C – NI1000, -60..250°C – NI1000, -60..150°C – Resistance, 0..100 Ω – Resistance, 0..200 Ω – Resistance, 0..400 Ω – Resistance, 0..1000 Ω
	3	0	Measurement Mode K2	0 1	– 2-wire **A** – 3-wire

A *Standard default settings*

Assignment			Parameter name	Value	Meaning
Channel	Byte	Bit			
– BL20-2AI-THERMO-PI					
0	0	0	Mains suppression K1	0 1	– 50Hz **A** – 60Hz
		1	Value representa-tion K1	0 1	– Integer (15Bit + sign) **A** – 12Bit (left-justified)
		2	Diagnostic K1	0 1	– release **A** – block
		3	Channel K1	0 1	– activate **A** – deactivate
	0	4 to 7	Element K1	0000 0001 0010 0011 0100 0101 0110 0111 1000 1001 1010 1011	– type K, -270..1370°C **A** – type B, +100...1820°C – type E, -270..1000°C – type J, -210..1200°C – type N, -270..1300°C – type R, -50..1760°C – type S, -50..1540°C – type T, -270..400°C – +/-50mV – +/-100mV – +/-500mV – +/-1000mV

A *Standard default settings*

Assignment			Parameter name	Value	Meaning
Channel	Byte	Bit			
1	1	0	Mains suppression K2	0 1	– 50Hz **A** – 60Hz
		1	Value representation K2	0 1	– Integer (15Bit + sign) **A** – 12Bit (left-justified)
		2	Diagnostic K2	0 1	– release **A** – block
		3	Channel K2	0 1	– activate **A** – deactivate
		4 to 7	Element K2	0000 0001 0010 0011 0100 0101 0110 0111 1000 1001 1010 1011	– type K, -270..1370°C **A** – type B, +100...1820°C – type E, -270..1000°C – type J, -210..1200°C – type N, -270..1300°C – type R, -50..1760°C – type S, -50..1540°C – type T, -270..400°C – +/-50mV – +/-100mV – +/-500mV – +/-1000mV

A *Standard default settings*

Assignment			Parameter name	Value	Meaning
Channel	Byte	Bit			
– BL20-4AI-U/I					
0 to 3	0 to 3	0	range x	0 1	– 0...10V/ 0...20mA **A** – -10...10V/ 4...20 mA
		1	value repre-sentation x	0 1	– Integer (15Bit + sign) **A** – 12Bit (left-justified)
		2	Diagnostic x	0 1	– release **A** – block
		3	Channel x	0 1	– activate **A** – deactivate
		4	Operation mode x	0 1	– voltage **A** – current
– BL20-1AO-I(0/4...20MA)					
1	0	0	Current mode	0 1	– 0...20mA **A** – 4...20mA
		1	Value representa-tion	0 1	– Integer (15Bit + sign) **A** – 12Bit (left-justified)
	1 to 2		Substitute value A1		The substitute value will be transmitted if the respective parameters of the gateway have been set to „output substitute value“.

A *Standard default settings*

Assignment			Parameter name	Value	Meaning
Channel	Byte	Bit			
– BL20-2AO-I(0/4...20MA))					
0	0	0	Current mode	0 1	– 0...20mA **A** – 4...20mA
		1	Value representa-tion	0 1	– Integer (15Bit + sign) **A** – 12Bit (left-justified)
		3	Channel K1	0 1	– activate **A** – deactivate
	1 to 2		Substitute value A1		The substitute value will be transmitted if the respective parameters of the gateway have been set to „output substitute value“.
1	3	0	Current mode	0 1	– 0...20mA **A** – 4...20mA
		1	Value representa-tion	0 1	– Integer (15Bit + sign) **A** – 12Bit (left-justified)
		3	Channel K2	0 1	– activate **A** – deactivate
	4 to 5		Substitute value A2		The substitute value will be transmitted if the respective parameters of the gateway have been set to „output substitute value“.

A *Standard default settings*

Assignment			Parameter name	Value	Meaning
Channel	Byte	Bit			
– BL20-2AO-U(-10/0...+10VDC)					
0	0	0	Voltage mode	0 1	– 0...10V **A** – -10...+10V
		1	Value representa-tion	0 1	– Integer (15Bit + sign) **A** – 12Bit (left-justified)
	1 to 2		Substitute value A1		The substitute value will be transmitted if the respective parameters of the gateway have been set to „output substitute value“.
1	3	0	Voltage mode	0 1	– 0...10V **A** – -10...+10V
		1	Value representa-tion	0 1	– Integer (15Bit + sign) **A** – 12Bit (left-justified)
	4 to 5		Substitute value A2		The substitute value will be transmitted if the respective parameters of the gateway have been set to „output substitute value“.

A *Standard default settings*

Assignment			Parameter name	Value	Meaning
Channel	Byte	Bit			
– BL20-1CNT-24VDC, counter mode					
0	0	0 to 5	Counter mode	100000 100001 100010	– continuous count **A** – single-action count – periodical count
	1	0	Gate function	0 1	– abort count procedure **A** – interrupt count procedure
		1	Digital input DI	0 1	– normal **A** – inverted
		2/ 3	Function DI	00 01 10 11	– input **A** – HW gate – Latch-Retrigger when edge pos. – synchronisation when edge pos.
		4	Synchroni-sation	0 1	– single-action **A** – periodical
		5/ 6	Main count direction	00 01 10	– none **A** – up – down

A *Standard default settings*

Assignment			Parameter name	Value	Meaning
Channel	Byte	Bit			
0	2 to 5		Lower count limit	-2 147 483 648 (-2^{31}) to 0	
			Lower count limit (HWORD)	-32768 **A** to 0 (Signed16)	
			Lower count limit (LWORD)	-32 768 to 32 767 (Signed16); 0 **A**	
	6 to 9		Upper count limit	0 to + 2147483647 (2^{31}-1)	
			Upper count limit (HWORD)	0 to 32767 **A** (Unsigned16)	
			Upper count limit (LWORD)	0 to 65535 **A** (Unsigned16)	
	10		Hysteresis	0 **A** to 255 (Unsigned8)	
	11	0/ 7	Pulse duration DO1, DO2 [n*2ms]	0 **A** to 255 (Unsigned8)	

A *Standard default settings*

Assignment			Parameter name	Value	Meaning
Channel	Byte	Bit			
0	12	0	Substitute value DO	0 1	0 **A** 1
		1	Diagnostic DO1	0 1	on **A** off
		2/ 3	Function DO1	00 01 10 11	– output **A** – on when cnt value >= ref. value – on when cnt value <= ref. value – pulse when cnt val. = ref. value
		5/ 6	Function DO2	00 01 10 11	– output **A** – on when cnt value >= ref. value – on when cnt value <= ref. value – pulse when cnt val. = ref. value
	13	0/ 1	Signal evaluation (A,B)	00 01 10 11	pulse and direction **A** rotary sensor: single rotary sensor: double rotary sensor: fourfold
		2	Sensor/ input filter (A)	0 1	2,5µs (200kHz) **A** 25µs (20kHz)
		3	Sensor/ input filter (B)	0 1	2,5µs (200kHz) **A** 25µs (20kHz)
		4	Sensor/ input filter (DI)	0 1	2,5µs (200kHz) **A** 25µs (20kHz)

A *Standard default settings*

Assignment			Parameter name	Value	Meaning
Channel	Byte	Bit			
0	13	5	Sensor (A)	0 1	– normal **A** – inverted
		7	Direction input (B)	0 1	– normal **A** – inverted
	14	0	Group diagnostics	0 1	– release **A** – block
		4/ 5	Behaviour CPU/master STOP	00 01 10 11	– turn off DO1 **A** – proceed with operating mode – DO1 switch to substitute value – DO1 hold last value
– BL20-1CNT-24VDC, measurement mode					
0	0	0 to 5	Measure-ment mode	100000 100001 100010	– frequency measurement **A** – revolutions measurement – period duration measu-rement
	1	1	Digital input DI	0 1	– normal **A** – inverted
		2	Function DI	0 1	– input **A** – HW gate
	2 to 4		Lower limit	0 to 16 777 214 x 10^{-3}	
			Lower limit (HWORD)	0 **A** to 255 (Unsigned8)	
			Lower limit (LWORD)	0 **A** to 65535	

A *Standard default settings*

Assignment			Parameter name	Value	Meaning
Channel	Byte	Bit			
0	5 to 7		Upper limit	1 to 16 777 215 x 10^{-3}	
			Upper limit (HWORD)	0 **A** to 255 (Unsigned8)	
			Upper limit (LWORD)	0 **A** to 65535	
	8 to 9		Integration time [n*10ms]	1 to 1 000; 10 **A**	
	10 to 11		Sensor pulse per revolution	1**A** to 65535	
	12	0	Substitute value DO1	0 1	0 **A** 1
		1	Diagnostic DO1	0 1	– on **A** – off
		2 to 4	Function DO1	00 01 10 11	– output **A** – outside of limit – below lower limit – above upper limit
	13	0 to 1	Signal evaluation (A,B)	00 01	– pulse and direction **A** – rotary sensor: single
		2	Sensor/input filter (A)	0 1	– 2,5µs (200kHz) **A** – 25µs (20kHz)
		3	Sensor/input filter (B)	0 1	– 2,5µs (200kHz) **A** – 25µs (20kHz)

A *Standard default settings*

Assignment			Parameter name	Value	Meaning
Channel	Byte	Bit			
0	13	4	Sensor/input filter (DI)	0 1	– 2,5µs (200kHz) **A** – 25µs (20kHz)
		5	Sensor (A)	0 1	– normal **A** – inverted
		7	Direction input (B)	0 1	– normal **A** – inverted
	14	0	Group diagnostics	0 1	– release **A** – block
		4 to 5	Behaviour CPU/master STOP	00 01 10 11	– turn off DO1 **A** – proceed with operating mode – DO1 switch to substitute value – DO1 hold last value
– BL20-1RS232					
0	0	0 to 4	Bit transfer rate	0 1 2 3 4 5 6 7 8 9 10 11 12 13 14 15	– reserved – 300 Bit/s – 600 Bit/s – 1200 Bit/s – 2400 Bit/s – 4800 Bit/s – 9600 Bit/s – 14400 Bit/s – 19200 Bit/s – 28800 Bit/s – 38400 Bit/s – 57600 Bit/s – 115200 Bit/s – reserved – reserved – reserved

A *Standard default settings*

Assignment			Parameter name	Value	Meaning
Channel	Byte	Bit			
0	0	6	Disable ReducedCtrl	1	Constant setting: The diagnostic messages are shown in Byte 6 of the process input data (independently from “Diagnosis”). Byte 6 of the process output data contains 2 bits, with which the receive or transmit buffer can be cleared.Byte 7 contains the status or control byte. User data are represented in Bytes 0 - 5.
		7	Diagnostics	0 1	– Enable **A** – Inhibit: Diagnosis activated/ diagnosis deactivated: This affects the separate fieldbus-specific diagnostic message – not the diagnosis embedded in the process input data.
	1	0	Stop bits	0 1	– 1 stop bit – 2 stop bits **A**

A *Standard default settings*

Assignment			Parameter name	Value	Meaning
Channel	Byte	Bit			
0	1	1 to 2	Parity	0	– None
				1	– Odd: **A** The parity bit is set so that the total number of bits (data bits plus parity bit) set to 1 is odd.
				2	– Even: The parity bit is set so that the total number of bits (data bits plus parity bit) set to 1 is even.
		3	Data bits	0	– The number of data bits is 7. **A**
				1	– The number of data bits is 8.
		4 to 5	Flow control	0	– None:**A** Data flow control is switched off.
				1	– “XON/XOFF”: Software handshake (XON/XOFF) is switched on.
				2	– “RTS/CTS” Hardware handshake (RTS/CTS) is switched on.
				3	– reserved
	2	0 to 7	XON character	0–255 (17 **A**)	– XON character: This character is used to start the transmission of data from the data terminal device if the software handshake is active.

A *Standard default settings*

Assignment			Parameter name	Value	Meaning
Channel	Byte	Bit			
0	3	0 to 7	XOFF character	0 – 255 (19 **A**)	– XOFF character: This character is used to stop the transmission of data from the data terminal device if the software handshake is active.
– BL20-1RS485/422					
0	0	0 to 4	Bit transfer rate	0	– reserved
				1	– 300 Bit/s
				2	– 600 Bit/s
				3	– 1200 Bit/s
				4	– 2400 Bit/s
				5	– 4800 Bit/s
				6	– 9600 Bit/s
				7	– 14400 Bit/s
				8	– 19200 Bit/s
				9	– 28800 Bit/s
				10	– 38400 Bit/s
				11	– 57600 Bit/s
				12	– 115200 Bit/s
				13	– reserved
				14	– reserved
				15	– reserved

A *Standard default settings*

Assignment			Parameter name	Value	Meaning
Channel	Byte	Bit			
0	0	6	Disable ReducedCtrl	1	Constant setting: The diagnostic messages are shown in Byte 6 of the process input data (independently from “Diagnosis”). Byte 6 of the process output data contains 2 bits, with which the receive or transmit buffer can be cleared.Byte 7 contains the status or control byte. User data are represented in Bytes 0 - 5.
	0	7	Diagnostics	0 1	– Enable **A** – Inhibit: Diagnosis activated/ diagnosis deactivated: This affects the separate fieldbus-specific diagnostic message – not the diagnosis embedded in the process input data.
	1	0	Stop bits	0 1	– 1 stop bit – 2 stop bits **A**

A *Standard default settings*

Assignment			Parameter name	Value	Meaning
Channel	Byte	Bit			
0	1	1 to 2	Parity	0	– None
				1	– Odd: **A** The parity bit is set so that the total number of bits (data bits plus parity bit) set to 1 is odd.
				2	– Even: The parity bit is set so that the total number of bits (data bits plus parity bit) set to 1 is even.
		3	Data bits	0	– The number of data bits is 7. **A**
				1	– The number of data bits is 8.
	1	4 to 5	Flow control	0	– None:**A** Data flow control is switched off.
				1	– “XON/XOFF”: Software handshake (XON/XOFF) is switched on.
				2	– “RTS/CTS” Hardware handshake (RTS/CTS) is switched on.
				3	– reserved
	2	0 to 7	XON character	0 – 255 (17 **A**)	– XON character for RS422 operation: This character is used to start the transmission of data from the data terminal device if the software handshake is active.

A *Standard default settings*

Assignment			Parameter name	Value	Meaning
Channel	Byte	Bit			
0	3	0 to 7	XOFF character	0 – 255 (19 **A**)	– XOFF character for RS422 operation: This character is used to stop the transmission of data from the data terminal device if the software handshake is active.

A *Standard default settings*
B

Assignment			Parameter name	Value	Meaning
Channel	Byte	Bit			
– BL20-1SSI					
0	0	5	Sensor data cable test	0	– Activate: **A** Data cable is checked for ZERO.
				1	– Deactivate: After the last valid bit, there will be no check that the data cable is at ZERO.
	1	0 to 3	Number of invalid bits (LSB)	0 to 15	The number of invalid bits in the position value delivered by the SSI-encoder at the LSB end. The significant word length of the position value transmitted to the module bus master is thus: SSI_FRAME_LEN - INVALID_BITS_MSB- INVALID_BITS_LSB. The invalid bits at the LSB end are removed by shifting the position value to the right, starting with the LSB. (Default: 0 Bit = 0 x 0). Basically, INVALID_BITS_MSB + INVALID_BITS_LSB must be smaller than SSI_FRAME_LEN.

0	1	4 to 6	Number of invalid bits (MSB)	0 to 7	The number of invalid bits in the position value delivered by the SSI-encoder at the MSB end. The significant word length of the position value transmitted to the module bus master is thus: SSI_FRAME_LEN - INVALID_BITS_MSB- INVALID_BITS_LSB. The invalid bits at the MSB end are set to zero by masking the position value. Basically, INVALID_BITS_MSB + INVALID_BITS_LSB must be smaller than SSI_FRAME_LEN. Default: 0 = 0_{hex}
	2	0 to 3	Bit transmission rate	0 1 2 3 4 5 6 7 8 to 15	– 1000000 Bit/s – 500000 Bit/s – 250000 Bit/s – 125000 Bit/s – 100000 Bit/s – 83000 Bit/s – 71000 Bit/s – 62500 Bit/s – reserved
	3	0 to 5	Number of data frame bits	1 to 32	Number of bits in the SSI data frame. Basically, SSI_FRAME_LEN must be larger than INVALID_BITS. Default: 25 = 19hex

0	3	7	Data format	0	Binary coded: **A** The SSI-encoder transmits data in binary code
				1	GRAY coded: The SSI-encoder transmits data in Gray code

Module Description in the Electronic Device Data Sheets (GSD)

BL20 gateways are integrated into PROFIBUS structures using electronic device data sheets (GSD).

Each individual module is supplied with a means of identification in the standard electronic device data sheet, making various forms of identification possible.

Standard module description

The configured module list is displayed with standard identification (general identification format), exception: empty slots and modules without process data are displayed in a special identification format. Modules cannot be unmistakably identified using this identification.

Advantage: Replacement modules need not be of an identical type to be accepted by the BL20 gateway. This means that “related” modules with identical process data lengths can be used. Thus, it is possible to exchange a 2 DO 24 V DC module with 0.5A with a 2 DO 24 V DC module with 2A. This form of module identification achieves, amongst other things, a higher measure of flexibility for process, parameter and diagnostic data.

Figure 28: Standard description of the digital input module BL20-2DI-24VDC-P

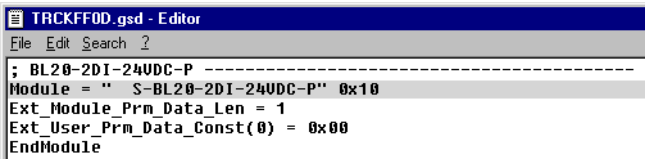

Module description according to type

The configured module list is displayed with extended identification (special identification format), which makes an exact identification of modules possible. The BL20 gateway accepts replacement modules only of an identical type.

Figure 29: Description according to type of the digital input module BL20-2DI-24VDC-P

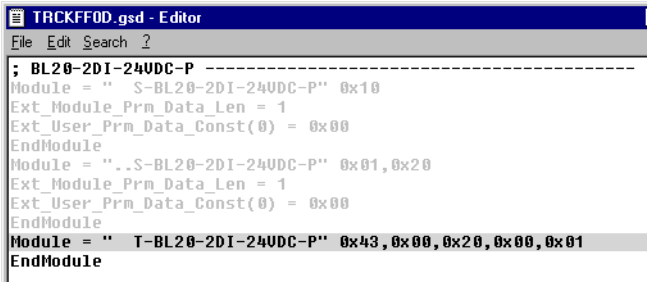

Options by the descriptions of modules:

Table 18: Optional module description

	Typified module description	Standard module description
Identification of individual modules by PROFIBUS-DP master and gateway	✓	
Plug/pull of identical modules	✓	✓
Plug/pull of module types with identical process data lengths, described by means of PROFIBUS-DP identification		✓
Plug/pull of module types with differing process data lengths, described by means of PROFIBUS-DP identification		

Example of a PROFIBUS-DP Configuration

The module description according to type is used in the following description of the process, configuration and parameter setting data.

Figure 30: Example of a station

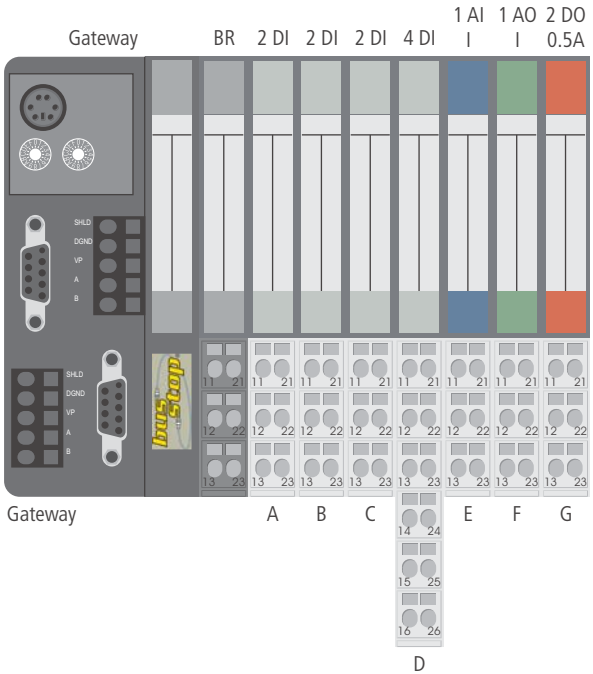

System description

Process data are displayed in INTEL format. The Motorola representation can be set using the gateway parameters.

Table 19: Parameter configuration data

Module	Input byte address	Output byte address	Byte (Bit 7...→...Bit 0)
A	0		A1, A0
B	1		B1, B0
C	2		C1, C0
D	3		D3, D2, D1, D0
E_1	4		E7, E6, ... E1, E0
E_2	5		E15, E14, ... E9, E8
F_1		0	F7, F6, ... F1, F0
F_2		1	F15, F14, ... F9, F8
G		2	G1, G0

Parameter Configuration Data

- Module bus station A:Not configurable
- Module bus station B:Not configurable
- Module bus station C:Not configurable
- Module bus station D:Not configurable
- Module bus station E:
  Bit 0 = 0: Current mode: 0...20 mA
  Bit 0 = 1: Current mode: 4...20 mA
  Bit 1 = 0: Value representation: integer (15 Bit + sign)
  Bit 1 = 1: Value representation: 12 Bit (left-justified)
- Module bus station F:
  Bit 0 = 0: Current mode: 0...20 mA
  Bit 0 = 1: Current mode: 4...20 mA
  Bit 1 = 0: Value representation: integer (15 Bit + sign)
  Bit 1 = 1: Value representation: 12 Bit (left-justified)
  SignedInteger Default value A1
- Module bus station G:Not configurable

Configuration Data

- Module bus station A: 2 DI
- Module bus station B: 2 DI
- Module bus station C: 2 DI
- Module bus station D: 4 DI
- Module bus station E: 1 AI I
- Module bus station F: 1 AO I
- Module bus station G: 2 DO 0.5 A

Table 20: Configuration Data

Module	**Value**
Configuration byte Offset address	
Gateway	
-	
1. Module bus station: 2 DI	
0	0x43 0x00 0x20 0x00 0x01 3. manufacturer-specific byte 2. manufacturer-specific byte 1. manufacturer-specific byte IO length, consistency special identification format: I-length follows, 3 manufacturer-specific bytes to follow → (Process data: 1 byte DI for module bus station A)

Module	Value
Configuration byte Offset address	
2. Module bus station: 2 DI	
1	0x43 0x00 0x20 0x00 0x01 3. manufacturer-specific byte 2. manufacturer-specific byte 1. manufacturer-specific byte IO length, consistency special identification format: I-length follows, 3 manufacturer-specific bytes to follow → (Process data: 1 byte DI for module bus station B)
3. Module bus station: 2 DI	
2	0x43 0x00 0x20 0x00 0x01 3. manufacturer-specific byte 2. manufacturer-specific byte 1. manufacturer-specific byte IO length, consistency special identification format: I-length follows, 3 manufacturer-specific bytes to follow → (Process data: 1 byte DI for module bus station C)

Module	Value
Configuration byte Offset address	
4. Module bus station: 4 DI	
3	0x43 0x00 0x30 0x00 0x01 3. manufacturer-specific byte 2. manufacturer-specific byte 1. manufacturer-specific byte IO length, consistency special identification format: I-length follows, 3 manufacturer-specific bytes to follow → (Process data: 1 byte DI for module bus station D)
5. Module bus station: 1 AI	
4	0x43 0x40 0x50 0x22 0x01 3. manufacturer-specific byte 2. manufacturer-specific byte 1. manufacturer-specific byte IO length, consistency special identification format: I-length follows, 3 manufacturer-specific bytes to follow → (Process data: 2 bytes AI for module bus station E)

Module	Value
Configuration byte Offset address	
6. Module bus station: 1 AO I	
6	0x83 0x40 0x05 0x06 0x01 3. manufacturer-specific byte 2. manufacturer-specific byte 1. manufacturer-specific byte IO length, consistency special identification format: I-length follows, 3 manufacturer-specific bytes to follow → (Process data: 2 bytes AO for module bus station F)

Diagnostics data

- Module bus station A: No diagnostics data available
- Module bus station B: No diagnostics data available
- Module bus station C: No diagnostics data available
- Module bus station D: No diagnostics data available
- Module bus station E:
  Bit 0: Measurement value range error
  Bit 1: Open circuit
- Module bus station F: No diagnostics data available
- Module bus station G: No diagnostics data available

Status Indicators/Diagnostic Messages Gateway

The gateway transmits the following diagnostics: the status of the BL20 station, the communication via the internal module bus, the communication to PROFIBUS-DP and the status of the gateway.

Diagnostic messages are displayed in two ways:

- via individual LEDs
- via the software of the respective fieldbus master (for example, PLC)

Diagnostic Messages via LEDs

Every BL20 gateway displays the following statuses via LEDs:

- 2 LEDs for module bus communication (module bus LEDs): GW and IOs
- 2 LEDs for PROFIBUS-DP communication (fieldbus LEDs): DIA and Bus

LED indicators

Table 21: LED indicators

LED	Status	Meaning	Remedy
GW	Green	5 V DC operating voltage present; firmware active; gateway ready to operate and transmit.	-
	Green, flashing, 1 Hz **and** LED IOs: Red	Firmware not active.	– Re-install the firmware or contact your Turck representative.
	Green, flashing, 4 Hz	Firmware active, gateway hardware defect.	– Replace the gateway.

LED	Status	Meaning	Remedy
Additional diagnosis indication **only** for BL20-GWBR-PBDP			
GW	Green, flashing, 1 Hz	U_{SYS}: undervoltage or overvoltage U_L: undervoltage	– Check that the supply voltage is within the permissible range.
IOs 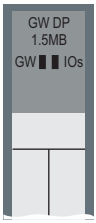	Green	The configured module bus station corresponds to the physically connected station, communication is active.	-
	Green, flashing 1 Hz	Station is in the I/O-ASSISTANT-Force Mode.	– Deactivate the I/O-ASSISTANT Force Mode.
	Red and LED “GW” off	Controller is not ready or Vcc level is not within the required range.	– Check the Bus Refreshing module to the right of the gateway and its wiring. If the mains voltage is correctly connected, contact your Turck representative.
	Red	Module bus is not ready.	– Check the individual BL20 modules for correct mounting.
	Red, flashing, 1 Hz	Non-adaptable modification of the physically connected station. Compare the planned BL20 station with the physical station.	– Check the physical station for defective or incorrectly fitted electronics modules.

LED	Status	Meaning	Remedy
IOs	Red/ green, flashing, 1 Hz	Adaptable modification of the physically connected station.	– Check the physical station for pulled or new but not planned modules.
	Red, flashing, 4 Hz	No communication via the module bus.	– Ensure that the guidelines for the use of power distribution modules have been observed.
DIA	Off	Gateway not transmitting diagnostic.	-
	Red, flashing, 1 Hz	Gateway transmitting extended diagnostic.	– Check the individual electronics modules on the station for diagnostic messages. – Check the diagnostic messages using the PLC software.
	Red	Gateway is generating statistical diagnostic.	– Check the individual electronics modules on the station for diagnostic messages. – Check the diagnostic messages using the PLC software.

LED	Status	Meaning	Remedy
Bus	Off	Fieldbus not in operation.	– Wait until firmware has been completely downloaded. – After completion of download: hardware error; replace the gateway.
	Green	Communication between gateway and PROFIBUS-DP master is error free.	-
	Red	Bus error on the gateway.	– If the gateway is the last module in the bus topology, check that the PROFIBUS-DP has been terminated with a terminating resistor. – Check if the PROFIBUS-DP connector or the direct wiring connections are fitted correctly. All connections must be correctly and securely fitted. – Check the cable to the PROFIBUS-DP master for damage and correct fitting.
			– Check if the correct baud rate has been set in the PLC master. – Compare the station engineering with the existing list of modules.
	Red flashing, 1 Hz	Invalid station address set.	– Set the correct station address via the hexadecimal rotary coding-switches.

Diagnostic Messages via the Software

The diagnostic messages are displayed in the corresponding software of the PROFIBUS-DP master as diagnostic bytes. For the meaning of the individual diagnostic bits, please refer to the Section “Diagnostics“ in this chapter.

You can find an example of diagnostic messages via a PLC in the Section „Example of Diagnostics with a Siemens S7-400 PLC”, chapter 4.

Diagnosis

BL20 offers 2 possibilities for the representation of diagnostic information:

- device related diagnosis:
  diagnosis-header
  + 2 byte gateway-diagnosis
  + maximum of 61 byte module diagnosis
- device-/ identifier-/ channel-specific diagnosis:
  diagnosis-header
  + **device related** diagnosis →2 byte gateway diagnosis
  + **identifier related** diagnosis →1 diagnosis bit for each possible module (64 bit = 8 byte)
  + **channel specific** diagnosis →active diagnosis blocks (3 byte per error message of the connected modules).

Note

The mode of diagnosis evaluation is determined via the gateway parameter „gateway diagnostics“ (parameter-byte 4, bit 5).

Device Related diagnosis

According to PROFIBUS-DP standards, the diagnosis telegram of the device related diagnosis is structured as follows:

Byte 1 to Byte 6	PROFIBUS-DP diagnosis according to DP standards	
Device Related diagnosis		
Byte 7	**Header** Besides the information that the following diagnosis is a device related diagnosis (bit 6 and bit 7 = „00“), the header also contains information about the length of the diagnosis telegram (maximum length = 64 byte). The header byte is included in the telegram length (1 byte header + 2 byte gateway diagnosis + max. 61 byte module diagnosis).	
Byte 8 and Byte 9	gateway diagnosis: Byte 8, bit 0 shows, for example, if another module in the station sends diagnosis information (bit 0 = 1), or not (bit 0 = 0).	
Byte 10 to Byte 61	Byte 10	First diagnosis byte of the 1. module capable for diagnosis in the station. (Depending on the module and the number of possible diagnosis bytes, further diagnosis bytes of the same module may follow.)
	Byte 11 to Byte 64	Further device related diagnostic information. Modules with 1 byte diagnosis data occupy 1 byte, Modules with multiple bytes of diagnosis data occupy a respective number of diagnosis bytes.

Note

The modules which are capable for diagnosis occupy in all cases the diagnosis bytes assigned to them, even if no actual diagnosis message is present.
In this case the bits in the diagnosis bytes are all = “0“.

Device-/ identifier - and channel specific diagnosis

The diagnosis telegram of this diagnosis evaluation contains all 3 possible diagnosis representations. The channel specific diagnosis information is only shown if diagnosis messages are actually present.

Byte 1 to 6	PROFIBUS-DP-diagnosis according to DP standards	
Device Related diagnosis		
Byte 7	**Header** Besides the information that the following diagnosis is a device related diagnosis (bit 6 and bit 7 = „00“), the header also contains information about the length of the diagnosis telegram (maximum length = 64 byte). The header byte is included in the telegram length (1 byte header + 2 byte gateway diagnosis + max. 61 byte module diagnosis).	
Byte 8 and Byte 9	gateway diagnosis: Byte 8, bit 0 shows, for example, if another module in the station sends diagnosis information (bit 0 = 1), or not (bit 0 = 0).	
Identifier specific diagnosis		
Byte 10 to 18	Byte 10	**Header** Besides the information that the following diagnosis is a identifier related diagnosis (bit 6 and bit 7 = „01“), the header also contains information about the length of the identifier related part of the diagnosis telegram. It always has 9 bytes (9 bytes = 1 byte header + 8 bytes for the maximum number of 64 possible modules).
	Byte 11	Shows possible diagnosis messages of the **modules 0 to 7**. Module 0 is the first module following the gateway. The module position is indicated by the position of the bit which is set in this byte. Example.: 0000_0**1**00 →error at module 2

	Byte 12	Shows possible diagnosis messages of **module 8 to 15**.
	...	
	Byte 18	Shows possible diagnosis messages of **module 56 to 63**.
Channel related diagnosis: (per module 3 bytes: 1 byte header + 1 byte channel description + 1 byte diagnosis) →Section “Channel specific diagnosis messages“		
Byte 19 to max. byte 52	Byte 19	**Header** Defines the channel related diagnosis with bit 6 and bit 7 = „10“. In addition to that, the header shows for which module the actual diagnosis message is valid.
	Byte 20	Shows which channel if the module sends diagnosis information (bit 0 to bit 5 contain the channel number) and if the respective channel is an in- or an output (bit 6 and bit 7).
	Byte 21	Bit 0 to 4 contain a value (decimal) which specifies the diagnosis message (please see Section “Channel specific diagnosis messages“). Bit 5 to bit 7 indicated whether the respective module is bit-, byte- or word-oriented module.

Description of the Gateway Diagnosis Bits

The texts in the column “Diagnostics“ correspond to those determined in the GSD files (Electronic Device Data Sheets), which are described in chapter 4.

Table 22: Gateway diagnostic bits

Diag. data record	Bit	Designation	Meaning
1	**Gateway warnings**		
	0	Module diagnostics available	
			0 = No module bus station is signaling a diagnostic. **1** = At least one module bus station with diagnostic function is signaling a diagnostic.
	1, 2	reserved	
	3	Station configuration changed	
			0 = The actual list of modules matches the configuration set in the configuration software of the corresponding fieldbus master. **1** = The actual list of modules has been altered in such a manner, that process data can still be exchanged with the module bus stations which are at present connected to the module bus. The constellation of the module bus station that is set in the configuration software (CheckConfig-Cmd) of the corresponding fieldbus master serves as a reference.

Table 22: Gateway diagnostic bits

A *only for gateway BL20-GWBR-PBDP with integrated supply unit*

Diag. data record	Bit	Designation	Meaning
	4	undervoltage field supply U_L **A**	
		0 = field supply U_L is within the permissible range **1** = field supply U_L is not within the permissible range	
	5	reserved	-
	6	undervoltage field supply U_{Sys} **A**	
		0 = field supply U_{Sys} is within the permissible range **1** = field supply U_{Sys} is not within the permissible range	
	7	Overcurrent/ Short circuit I_I	
		0 = current I_I is within the permissible range **1** = current I_I is not within the permissible range	
2	**Gateway errors**		
	0...1	reserved	-
	2	Module bus error	
		0 = Communication with the module bus station on the module bus is possible. **1** = Communication with the module bus station on the module bus is not possible.	

Table 22: Gateway diagnostic bits

Diag. data record	Bit	Designation	Meaning
	3	Master configuration error	
		0 = The actual list of modules matches the configuration set in the configuration software of the corresponding fieldbus master. **1** = The actual list of modules has been altered in such a manner, that no process data can be exchanged with the module bus stations which are at present connected to the module bus. The constellation of the module bus station, set in the configuration software of the corresponding fieldbus master serves as a reference.	
	4	reserved	
	5	Station configuration error	
		0 = The gateway has prepared the station's configuration to be read out. **1** = The gateway could not prepare the station's configuration to be read out.	
	6	I/O-ASSISTANT Force Mode active	
		0 = The fieldbus master can access the parameter, diagnostics and process data of the module bus stations. **1** = The force mode has been activated via the service interface (by I/O-ASSISTANT). This separates the fieldbus master from the outputs of the module bus stations. No process data exchange is taking place from the fieldbus master to the output modules.	
	7	reserved	

Note

Up to 61 bytes of module-specific diagnostic errors can follow.

Module diagnosis

Device related diagnosis messages

- **BL20-BR-24VDC-D**

Table 23: BL20-BR-24VDC-D

diagnosis byte	bit	diagnosis
n	0	Module bus undervoltage warning
	1	reserved
	2	Undervoltage field supply
	3	reserved

- **BL20-PF-24VDC-D**

Table 24: BL20-PF-24VDC-D

diagnosis byte	bit	diagnosis
n	1	reserved
	2	reserved
	3	undervoltage field supply
	4	reserved

BL20-PF-120/230VAC-D

Table 25: BL20-PF-120/230VAC-D

diagnosis byte	bit	diagnosis
n	0	reserved
	1	reserved
	2	undervoltage field supply
	3	reserved

BL20-4DI-NAMUR

Table 26: BL20-4DI-NAMUR

diagnosis byte	bit	diagnosis
n	0	short circuit sensor 1
	1	open circuit sensor 1
	2	short circuit sensor 2
	3	open circuit sensor 2
	4	short circuit sensor 3
	5	open circuit sensor 3
	6	short circuit sensor 4
	7	open circuit sensor 4

BL20-1AI-I(0/4...20MA)

Table 27: BL20-1AI-I(0/4...20MA)

diagnosis byte	bit	diagnosis
n (channel 1)	0	measurement value range error**A**
	1	open circuit

A *Only in the measurement range 4 to 20 mA*

BL20-2AI-I(0/4...20MA)

Table 28: BL20-2AI-I(0/4...20MA)

diagnosis byte	bit	diagnosis
n (channel 1)	0	measurement value range error**A**
	1	open circuit
n + 1 (channel 2)	0	measurement value range error**A**
	1	open circuit

A *Only in the measurement range 4 to 20 mA*

BL20-1AI-U(-10/0...+10VDC

Table 29: BL20-1AI-U (-10/0...+10VDC

diagnosis byte	bit	diagnosis
n (channel 1)	0	measurement value range error **A**

BL20-2AI-U(-10/0...+10VDC)

Table 30: BL20-2AI-U (-10/0...+10VDC

diagnosis byte	bit	diagnosis
n (channel 1)	0	measurement value range error **A**
n (channel 2)	0	measurement value range error **A**

BL20-2AI-PT/NI-2/3

Table 31: BL20-2AI-PT/NI-2/3

***A** threshold: 1% of the positive measurement range end value*
***B** threshold: 5 Ω (loop resistance)*

diagnosis byte	bit	diagnosis
n (channel 1)	0	Measurement value range error **A** (Underflow diagnostics in temperature measurement ranges only)
	1	Open circuit
	2	Short circuit **B** (in temperature measurement ranges only)
	3 to 7	reserved

BL20-2AI-THERMO-PI

Table 32: BL20-2AI-THERMO-PI

***A** threshold: 1% of the positive measurement range end value*

diagnosis byte	bit	diagnosis
n	0	measurement value range error **A**
	1	open circuit (only in temperature measurement ranges)
	2 to 7	reserved

BL20-4AI-U/I

Table 33: BL20-4AI-U/I

***A** threshold: 1% of the positive measurement range end value, underflow diagnosis only in value range 4...20 mA*
***B** threshold: 3 mA (only in value range 4...20 mA*

diagnosis byte	bit	diagnosis
n (ch.0) to n + 3 (ch. 3)	0	measurement value range error **A**
	1	open circuit **B**
	2 to 7	reserved

BL20-2DO-24VDC-0.5A-P

Table 34: BL20-2DO-24VDC-0.5A-P

diagnosis byte	bit	diagnosis
n	0	overcurrent (short-circuit channel 1)
	1	overcurrent (short-circuit channel 2)

BL20-2DO-24VDC-0.5A-N

Table 35: BL20-2DO-24VDC-0.5A-N

diagnosis byte	bit	diagnosis
n	0	overcurrent (short-circuit channel 1)
	1	overcurrent (short-circuit channel 2)

BL20-2DO-24VDC-2A-P

Table 36: BL20-2DO-24VDC-2A-P

diagnosis byte	bit	diagnosis
n	0	overcurrent (short-circuit channel 1)
	1	overcurrent (short-circuit channel 2)

BL20-4DO-24VDC-0.5A-P

Table 37: BL20-4DO-24VDC-0.5A-P

diagnosis byte	bit	diagnosis
n	0	overcurrent /short-circuit (1 ch. min)

BL20-16DO-24VDC-0.5A-P

Table 38: BL20-16DO-24VDC-0.5A-P

diagnosis byte	bit	diagnosis
n	0	Overcurrent (short-circuit channel 1-4)
	1	Overcurrent (short-circuit channel 5-8)
	2	Overcurrent (short-circuit chnnel 9-12)
	3	Overcurrent (short-circuit channel 13-16)

BL20-32DO-24VDC-0.5A-P

Table 39: BL20-32DO-24VDC-0.5A-P

diagnosis byte	bit	diagnosis
n	0	Overcurrent (short-circuit channel 1-4)
	1	Overcurrent (short-circuit channel 5-8)
	2	Overcurrent (short-circuit chnnel 9-12)
	3	Overcurrent (short-circuit channel 13-16)
	4	Overcurrent (short-circuit channel 17-20)
	5	Overcurrent (short-circuit channel 21-24)
	6	Overcurrent (short-circuit chnnel 25-28)
	7	Overcurrent (short-circuit channel 29-32)

BL20-1CNT-24VDC

Table 40: BL20-1CNT-24VDC

diagnosis byte	bit	diagnosis
n When bit 7 = 0 (counter mode)	0	Short-circuit / open circuit →ERR_DO
	1	Short-circuit in sensor power supply→ERR-24VDC
	2	End of counter range wrong
	3	Start of counter range wrong
	4	Invert-DI+latch-retr. not perm. It is not permitted to invert the level of the digital input when using the latch-retrigger-function
	5	Main count direction wrong
	6	Operating mode wrong
	7	Measurement mode Bit = 0 Conter mode active
n When bit 7 = 1 (Measure-ment mode)	0	Short-circuit / open circuit →ERR_DO
	1	Short-circuit in sensor power supply →ERR-24VDC
	2	Sensor pulse wrong
	3	Integration time wrong
	4	Upper limit wrong
	5	Lower limit wrong
	6	Operating mode wrong
	7	Operation mode Bit = 1 measurement operation is active

BL20-1RS232

Table 41: BL20-1RS232

diagnosis byte	bit	diagnosis
n	0	parameterization error
	1	hardware failure
	2	data flow control error
	3	frame error
	4	buffer overflow

BL20-1RS485/422

Table 42: BL20-1RS485/422

diagnosis byte	bit	diagnosis
n	0	parameterization error
	1	hardware failure
	2	data flow control error (only in RS422-mode)
	3	frame error
	4	buffer overflow

BL20-1SSI

Table 43: BL20-1SSI

diagnosis byte	bit	diagnosis
n	0	SSI group diagnostics
	1	open circuit
	2	sensor value overflow
	3	sensor value underflow
	4	parameterization error

Channel specific diagnosis messages

BL20-BR-24VDC-D

Table 44: BL20-BR-24VDC-D

Value (dec.)	diagnosis
16	module bus undervoltage warning
18	undervoltage field supply

BL20-PF-24VDC-D

Table 45: BL20-PF-24VDC-D

Value (dec.)	diagnosis
18	undervoltage field supply

BL20-PF-120/230VAC-D

Table 46: BL20-PF-120/230VAC-D

Value (dec.)	diagnosis
18	undervoltage field supply

BL20-4DI-NAMUR

Table 47: BL20-4DI-NAMUR

Value (dec.)	diagnosis
16	overcurrent/ short circuit sensor 1
17	open circuit sensor 1
18	overcurrent/ short circuit sensor 2
19	open circuit sensor 2
20	overcurrent/ short circuit sensor 3
21	open circuit sensor 3
22	overcurrent/ short circuit sensor 4
23	open circuit sensor 4

BL20-xAI-I(0/4...20MA)

Table 48: BL20-xAI-I (0/4...20MA)

Value (dec.)	diagnosis
16	measurement value range error
17	open circuit

BL20-xAI-U(-10/0...+10VDC)

Table 49: BL20-xAI-U (-10/0...+10VDC)

Value (dec.)	diagnosis
16	measurement value range error

BL20-2AI-PT/NI-2/3

Table 50: BL20-2AI-PT/NI-2/3

Value (dec.)	diagnosis
16	measurement value range error
17	open circuit
18	short circuit (in temperature measurement ranges only)

BL20-2AI-THERMO-PI

Table 51: BL20-2AI-THERMO-PI

Value (dec.)	diagnosis
16	measurement value range error
17	open circuit

BL20-4AI-U/I

Table 52: BL20-4AI-U/I

Value (dec.)	diagnosis
16	measurement value range error
17	open circuit

BL20-2DO-24VDC-0.5A-P

Table 53: BL20-2DO-24VDC-0.5A-P

Value (dec.)	diagnosis
16	ovrcurr/shrt-circ(>=1 of K1-4)

BL20-2DO-24VDC-0.5A-N

Table 54: BL20-2DO-24VDC-0.5A-N

Value (dec.)	diagnosis
16	overcurrent /short-circuit(1 ch. min)

BL20-2DO-24VDC-2A-P

Table 55: BL20-2DO-24VDC-2A-P

Value (dec.)	diagnosis
16	ovrcurr/shrt-circ(>=1 of K1-4)

BL20-4DO-24VDC-0.5A-P

Table 56: BL20-4DO-24VDC-0.5A-P

Value (dec.)	diagnosis
16	ovrcurr/shrt-circ(>=1 of K1-4)

BL20-16DO-24VDC-0.5A-P

Table 57: BL20-16DO-24VDC-0.5A-P

Value (dec.)	diagnosis
16	ovrcurr/shrt-circ(>=1 of K1-4)

BL20-32DO-24VDC-0.5A-P

Table 58: BL20-32DO-24VDC-0.5A-P

Value (dec.)	diagnosis
16	Überstrom Kanal 1, 2, 3 oder 4
17	Überstrom Kanal 5, 6, 7 oder 8
18	Überstrom Kanal 9, 10, 11 oder 12
19	Überstrom Kanal 13, 14, 15, oder 16
20	Überstrom Kanal 17, 18, 19 oder 20
21	Überstrom Kanal 21, 22, 23 oder 24
22	Überstrom Kanal 25, 26, 27 oder 28
23	Überstrom Kanal 29, 30, 31 oder 32

BL20-1CNT-24VDC

Table 59: BL20-1CNT-24VDC (counter mode)

Value (dec.)	diagnosis
16	short-/open circuit ERR_DO
17	short-circuit sensor pwr supply
18	end of counter range wrong
19	start of counter range wrong
20	invert-DI+latch-retr. not perm.
21	main count direction wrong
22	operating mode wrong
23	measurement mode

Table 60: BL20-1CNT-24VDC (measurement mode)

Value (dec.)	diagnosis
16	short-/open circuit ERR_DO
17	short-circuit sensor pwr supply
18	sensor pulse wrong
19	integration time wrong
20	upper limit wrong
21	lower limit wrong
22	operating mode wrong
23	measurement mode

BL20-1RS232

Table 61: BL20-1RS232

Value (dec.)	diagnosis
19	parameterization error
20	hardware failure
21	data flow control error
22	frame error
23	buffer overflow

BL20-1RS485/422

Table 62: BL20-1RS485/422

Value (dec.)	diagnosis
19	parameterization error
20	hardware failure
21	data flow control error (only in RS422-mode)
22	frame error
23	buffer overflow

BL20-1SSI

Table 63: BL20-1SSI

Value (dec.)	diagnosis
16	SSI group diagnostics
17	open circuit
18	sensor value overflow
19	sensor value underflow
20	parameterization error

4 Connections to Automation Devices

Introduction **2**

Electronic Device Data Sheets (GSD) **3**

– Module description according to type 4
Electronic Data Sheet File 4
Compressing Module Process Data 6
Example of Compressing Module Process Data 9
General Note 13
Standard Module Description 15
Module Description according to Type 16

Connection to a Siemens S7 PLC **17**

Reading-in the GSD File 17
– Reading-in the GSD files before starting the software 17
– Reading-in the GSD files after starting the software 17
Selecting the BL20 Gateway as a Slave 19
Example of a Mixed Usage Configuration 20
Setting Gateway Parameters 20
Configuring the BL20 Station 22
Setting Parameters for BL20 modules 22
Error Diagnostics (Station Diagnostics) when connected to a Siemens S7 PLC 23

Diagnostics on PROFIBUS-DP **24**

Diagnostic messages in the PLC 24

Example of Diagnostics with a Siemens S7-400 PLC **27**

Short-Circuit in a Digital Output Module 29
– Planned but not plugged I/O Module 30
– Interruption of the Field Voltage 31

Introduction

This chapter contains detailed information on how to connect a BL20 station to higher-level automation devices, for example, programmable logic controllers (PLC) on PROFIBUS-DP.

PROFIBUS-DP is based on DIN 19 245 Parts 1 and 3, and has been integrated into the European fieldbus standard EN 50 170.

Note

BL20 gateways can only be used as slaves on PROFIBUS-DP. Gateways have no master function.

All manufacturers of control systems offer plug-in network cards for their PLCs, to which BL20 gateways can easily be connected. Furthermore, it is possible to use a PC as a master if it has an appropriate PC PROFIBUS card.

Please refer to the respective manuals supplied by manufacturers for detailed information concerning individual control systems and automation devices.

Connections to the Siemens Simatic S7 PLC are described.

Attention

The network and PC cards must comply with standards defined in PROFIBUS-DP DIN 19 245 Part 3.

The designations used in this manual for programmable logic controllers and software programs are registered and protected trademarks belonging to the respective manufacturer.

Electronic Device Data Sheets (GSD)

BL20 gateways are integrated into PROFIBUS structures using electronic device data sheets (GSD).

Module Description in the Electronic Device Data Sheets

Each individual module is supplied with a means of identification in the standard electronic device data sheet, which makes various forms of identification possible.

Standard module description

The configured list of modules is displayed with standard identification (general identification format), exception: empty slots and modules without process data are displayed in a special identification format. Modules cannot be unmistakably identified using this identification.

Advantage: Replacement modules need not be of an identical type to be accepted by the BL20 gateway. This means that “related” modules with identical process data lengths can be used. Thus, it is possible to exchange a 2 DO 24 V DC module with 0.5A with a 2 DO 24 V DC module with 2A. This form of module identification achieves, amongst other things, a higher measure of flexibility for process, parameter and diagnostic data.

Figure 31: Standard description of the digital input module BL20-2DI-24VDC-P

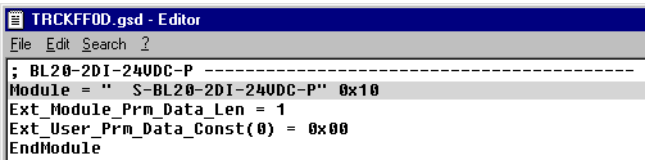

Module description according to type

The configured list of modules is displayed with extended identification (special identification format), which makes an exact identification of modules possible. The BL20 gateway accepts modules exchanged only with modules of an identical type.

Figure 32: Description according to type of the digital input module BL20-2DI-24VDC-P

```
TRCKFF0D.gsd - Editor
File  Edit  Search  ?
; BL20-2DI-24VDC-P ----------------------------------------
Module = "  S-BL20-2DI-24VDC-P" 0x10
Ext_Module_Prm_Data_Len = 1
Ext_User_Prm_Data_Const(0) = 0x00
EndModule
Module = "..S-BL20-2DI-24VDC-P" 0x01,0x20
Ext_Module_Prm_Data_Len = 1
Ext_User_Prm_Data_Const(0) = 0x00
EndModule
Module = "  T-BL20-2DI-24VDC-P" 0x43,0x00,0x20,0x00,0x01
EndModule
```

Electronic Data Sheet File

The device data of all BL20 modules and gateways are described in the Electronic Device Data Sheets (GSD files).

These files are available for the BL20 gateway with a 1.5 Mbaud transmission rate and the BL20 gateway with a 12 Mbaud transmission rate.

Note

Please note that for GSD files (extension *.gsd) the default language is English.

The GSD file “TRCKFF0D.gsd” for the 1.5 Mbaud gateway and the GSD file “TRCKFF0E.gsd” for the 12 Mbaud gateway contain for a multitude of applications sufficient data and options for projecting, configuring, setting parameters and diagnostics of your BL20 stations, as well as further functions, for example, the grouping of BL20 modules of the same type to blocks. The aim of creating these blocks is to save configuration bytes and at the same time increase

the amount of parameters and process data transmitted via the internal module bus.

Figure 33: Heading of the GSD file for the 1.5 MBaud gateway

TRCKFF0D.gsd - Editor

File Edit Search ?

```
;=========================================================
; Hans Turck GmbH & Co. KG
; Devices: BL20-GW-PBDP-1.5MB, BL20-GW-PBDP-1.5MB-S
; Version: V2.2
; Date: Jan 24th, 2002
; Author: S. Steinkaemper
; Description: Extended GSD file for modular
;    DP-slave-station BL20-GW-PBDP-1.5MB and
;    BL20-GW-PBDP-1.5MB-S.
;    This extended GSD file supports
;    module process data compressing.
; Modifications:
; Jan 24th, 2002 S. Steinkaemper V2.2 released
;
; Copyright (c) 2002 Hans Turck GmbH & Co. KG
;=========================================================
;
#Profibus_DP
```

Note

The respective actual versions of the GSD file “TRCKFF0D.gsd” for the 1.5 Mbaud gateway as well as the GSD file “TRCKFF0E.gsd” for the 12 Mbaud gateway are available directly from Turck. It is also possible to gain updates by downloading the files from the PROFIBUS User Organization’s homepage: www.profibus.com or from the Turck homepage: www.turck.com.

A tailor-made GSD file can be generated for corresponding facility structures with the assistance of I/Oassistant from Turck.

I/Oassistant generates on demand an adapted GSD file according to the current structure of the BL20 station. This GSD file must be subsequently transmitted to the PLC and configuration software of the PROFIBUS-DP master.

You can find a short description of I/Oassistant ’s functions in chapter 9. Please refer to the Online Help supplied with I/Oassistant for a detailed description of its operation and functions.

Compressing Module Process Data

The compression of process data of modules of the same type (standard module description) or of identical type (module description according to type) serves essentially to reduce the number of configuration bytes as well as to compress data to be transmitted, leading to a more rapid communication between the fieldbus master and the individual BL20 modules.

Compressed modules are added as multiple blocks or as follow-up modules during the engineering phase:

- Multiple blocks (module description according to type, identified in the GSD file by “2*T-BL20...“ to “4*T-BL20...“):
  only 1 process data byte per multiple block

Attention

There are no plans for the use of multiple module blocks which exceed the limit of 1 byte process data (“3*T-BL20...” and “4*T-BL20...” with modules with 4 DI or 4 DO).

Follow-up modules (module descriptions according to type or standard, identified in the GSD file by “..S-BL20...“ or “...T-BL20...“); their process data bits are added to the process data of the 1. module in the respective block, until the limit of 1 byte per process data is reached.

Attention

The total of the process data lengths of all modules grouped to a block must not exceed 1 byte.

The required number of process data bytes is calculated from the number of process data of the individual modules and the type of description.

Example 1:

Table 64: Number of process data bytes for three BL20-2DI-24VDC-P modules

Module description	Module-No.			Total of process data bytes
	1	2	3	
Not compressed	1 Byte	1 Byte	1 Byte	3 Byte
Compressed: standard description	2 Bits	12 Bits	2 Bits	1 Byte
Compressed: description according to type	2 Bits	12 Bits	2 Bits	1 Byte

Example 2:

Table 65: Number of process data bytes for 5 BL20-2DI-24VDC-P modules

Module description	Module-No. 1	2	3	4	5	Total of process data bytes
Not compressed	1 Byte for each module					5 Bytes
Compressed: standard description	2 Bits for each module					2 Bytes
Compressed: description according to type	2 Bits for each module					2 Bytes
Compressed: description according to type, multiple module blocks	1 Byte				2 Bits	2 Bytes

Example of Compressing Module Process Data

When using modules that are grouped together by the software, certain conditions have to be met. These are explained by the following example:

Figure 34: Example of a BL20 station

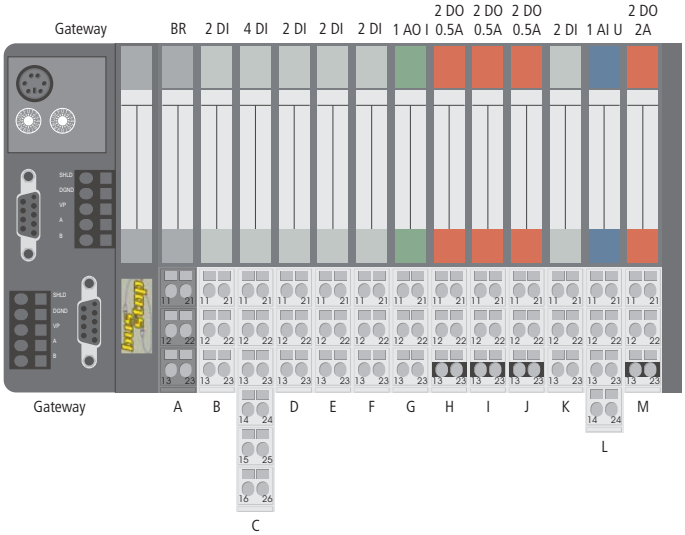

An overview of possible configuration options for the depicted BL20 station are shown in the following tables.

The entries in the columns “Module (*)” and “Module (**)” mean:

- Module (*):
  Order of modules: non compressed/compressed (module block)

- Module (**):
  Order of modules in the module block (when using compressed modules); modules which belong together are colored grey

Table 66: Example of creating a block of I/O modules with standard module description

Module		**Standard module description**		
Order of non-compressed modules	Type	Designation of GSD file	Module (*)	Module (**)
GW	Gateway			
A	BR			
B	2 DI	S-BL20-2DI-24VDC-P	1	
C	4 DI	S-BL20-4DI-24VDC-P	2	
D	2 DI	S-BL20-2DI-24VDC-P	3	1
E	2 DI	..S-BL20-2DI-24VDC-P	3	2
F	2 DI	..S-BL20-2DI-24VDC-P	3	3
G	1 AO I	S-BL20-1AO-I(0/4...20MA)	4	
H	2 DO 0.5A	S-BL20-2DO-24VDC-0.5A-P	5	1
I	2 DO 0.5A	..S-BL20-2DO-24VDC-0.5A-P	5	2
J	2 DO 0.5A	..S-BL20-2DO-24VDC-0.5A-P	5	3
K	2 DI	..S-BL20-2DI-24VDC-P	3	4
L	1 AI	S-BL20-1AI-U(-10/0...+10VDC)	6	
M	2 DO 2A	..S-BL20-2DO-24VDC-2A-P	5	4

Figure 35:
Use of standard module description in a Siemens PLC system

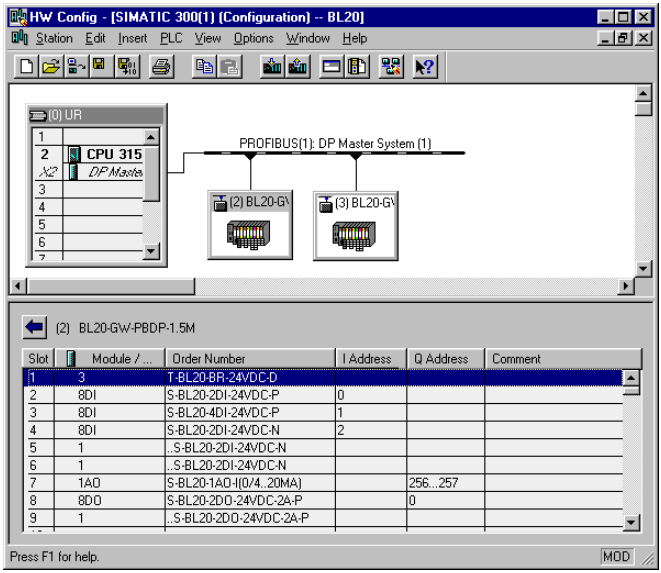

Table 67: Example of creating a block of I/O modules with module description according to type

Module		**Module desrciption according to Type**		
Order of non-compressed modules	Type	Designation in GSD file	Module (*)	Module(**)
GW	Gateway			
A	BR			
B	2 DI	T-BL20-2DI-24VDC-P	1	1
C	4 DI	..T-BL20-4DI-24VDC-P	1	2
D	2 DI	..T-BL20-2DI -4VDC-P	1	3
E	2 DI	T-BL20-2DI-24VDC-P	2	1
F	2 DI	..T-BL20-2DI-24VDC-P	2	2
G	1 AO I	T-BL20-1AO-I(0/4...20MA)	3	
H	2 DO 0.5A	3* T-BL20-2DO-24VDC-0.5A-P	4	1
I	2 DO 0.5A		4	2
J	2 DO 0.5A		4	3
K	2 DI	..T-BL20-2DI-24VDC-P	2	3
L	1 AI	T-BL20-1AI-U(-10/0...+10VDC)	5	
M	2 DO 2A	T-BL20-2DO-24VDC-2A-P	6	

Figure 36: Use of module description according to type in a Siemens PLC system

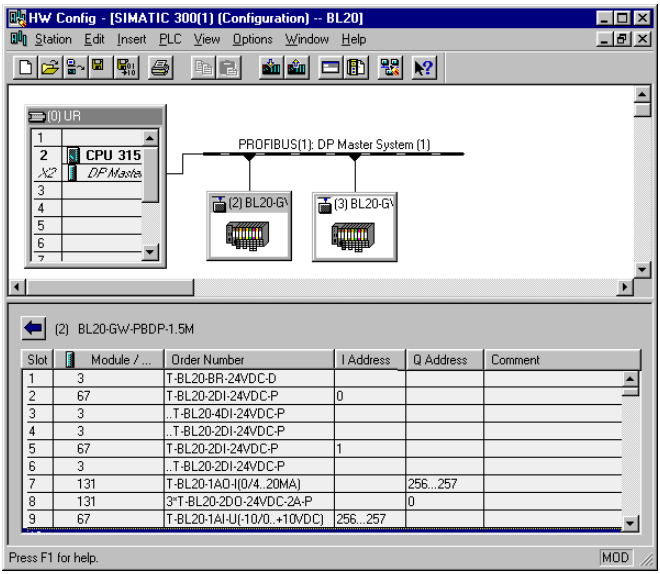

General Note

Input and output modules are considered separately as blocks. This means, if on the physical station a number of input modules is followed by a number of output modules and these are again followed by more input modules, the software groups the two blocks of input modules into one block of modules.

In the example:

On the physical station, a group of 3 digital input modules (modules D to F) is followed by group of output modules (modules G to J), these are followed by a further input module (module K). The soft-

ware groups module K with the modules D to F into one block of modules.

Note

The order of the modules in the process data blocks does not always match the order of the modules on the physical station.

Attention

It is not permitted for the total of the process data lengths of all the modules grouped to a module block to exceed 1 Byte.

The follow-up modules can be used in both the standard module description and in the description according to type.

Note

Exception: Multiple modules (“2*T-BL20...” to “4*T-BL20...”) cannot be used as follow-up modules.

Relay modules are treated the same as digital output modules when their process data is being compressed.

When modules are plugged onto planned empty slots, the communication of the fieldbus master depends on the gateway parameter “Station configuration” (please refer to the Section “Setting Parameters“, chapter 2).

- Parameter value “Do not allow changes” (default): The station does not go online. An error message is generated.
- Parameter value “Allow changes”: The modules are ignored by the fieldbus master. They can only be operated via I/Oassistant (please refer to chapter 9).

The maximum station extension with up to 128 modules can only be achieved with non-compressed standard module description. The reason being the maximum possible number of configuration bytes.

Standard Module Description

During the configuration process, each process data of the different modules of a block is assigned a specific bit position in the corresponding data byte.

In the example:

The following overview illustrates the bit structure of a process data byte for 4 compressed modules BL20-2DI-24VDC-P::

Table 68: Bitstruktur

Bit 7	Bit 6	Bit 5	Bit 4	Bit 3	Bit 2	Bit 1	Bit 0
DI 2	DI 1	DI 2	DI 1	DI 2	DI 1	DI 2	DI 1
Module K		Module F		Module E		Module D	

Due to this assignment, electronics modules can only be exchanged with modules with identical process data lengths.

The first follow-up module must have the same process data length as the “original” module.

In the example:

Module B cannot be grouped together with module C, because the modules have different process data lengths (2 DI and 4 DI).

Module D cannot be grouped together with module B, because a module of the same type (input module), but with a different process data length (4 DI) has been plugged between the two modules.

Note

The option of creating blocks of modules can be decisively influenced during configuration of an BL20 station.

Module Description according to Type

If the original module is identified according to type, all follow-up modules can have different process data lengths. The description according to type guarantees the unmistakable identification of the electronics module.

The grouping into blocks can be carried out with the help of “multiple modules” to save configuration bytes. For example, the modules H to J can be described as the module with the identification “3*T-BL20...”

The following overview illustrates the various packing options:

Table 69: Number of configuration bytes, depending upon the method of compression

Compression method	**Module description**	**Configuration bytes**			
		Modules			
		H	I	J	Total
Standard description	S-BL20.../ ..S-BL20...	1	2	2	5 Bytes
Description according to type	T-BL20.../ ..T-BL20...	5	4	4	13 Bytes
Description according to type, multiple block	3T-BL20...	5			5 Bytes

Note

It should be noted, when using “multiple modules” that this option is only available for modules mounted next to each other. This means, in contrast to the agreements reached above, it is not possible to consider modules that are not mounted next to one another as blocks.

Connection to a Siemens S7 PLC

The software SIMATIC Manager 5.0.2.0 from Siemens is used to configure the connection of a BL20 gateway with a Siemens S7 PLC.

Reading-in the GSD File

The GSD files for BL20 must be read into the software before you can begin with the initial configuration. There are two procedures possible for reading-in the files:

Reading-in the GSD files before starting the software

- Copy the GSD files “TRCKFF0D.gsd” for the BL20 gateway 1.5 Mbaud, or the “TRCKFF0E.gsd” for the BL20 gateway 12 MBaud into the “Step7\S7data\GSD” directory.
- Copy the icon files (*.bmp) into the “Step7\S7data \S7data\NSBMP” directory.
- Start the SIMATIC Manager software.
- The BL20 gateways will automatically be entered into the hardware overview following correct installation of the files. The hardware overview can be accessed using the ‹Insert ? Hardware Catalog› command

Reading-in the GSD files after starting the software

Proceed as follows to read-in the above GSD files, if you have already started the software.

- Create a new or open an existing project.
- Open the hardware configuration software.
- Copy the required GSD file using the “Options →Install New *.GSD Files...“ command.

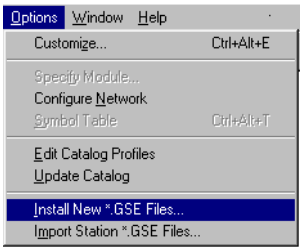

*Figure 37: Inserting a new GSD file using the “Install New *.GSE Files...” command*

- Select the GSD file from the corresponding source directory.

Figure 38: Selecting the GSD file from the corresponding directory

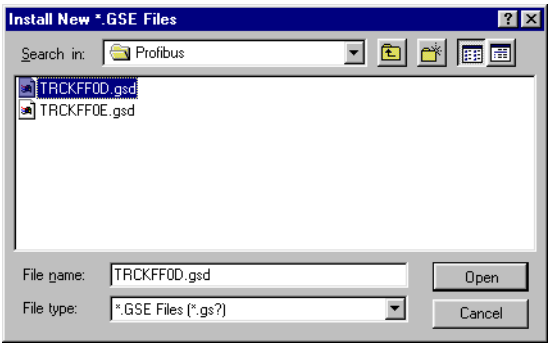

- The GSD files are listed as separate entries in the hardware catalog following correct installation.

Note

The exact configuration procedure can be found in the operators manual, which is supplied with the software.

Selecting the BL20 Gateway as a Slave

To insert a BL20 station as a slave, select the required entry from the hardware catalog.

Figure 39: Inserting a BL20 station 1.5 Mbaud as a slave

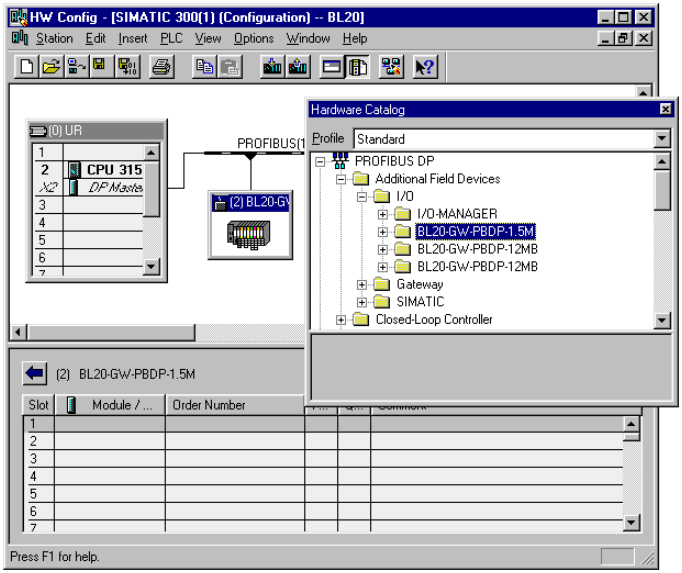

Example of a Mixed Usage Configuration

You can extend the fieldbus structure as you wish in the manner described above; thereby, mixed structures are possible using PROFIBUS devices from third-party manufacturers.

Figure 40: Fieldbus structure with mixed usage

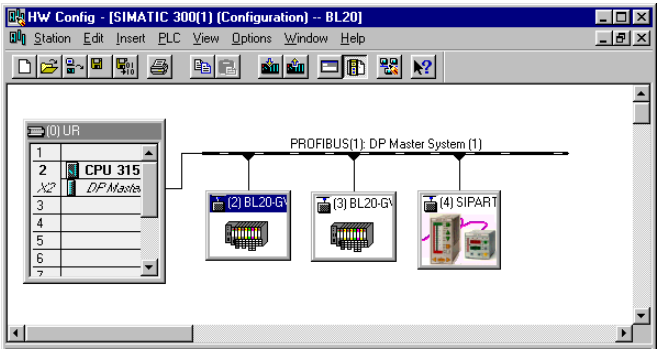

Setting Gateway Parameters

To set the gateway parameters, double-click the corresponding

BL20 station. In the window which opens, click the “Assigning Parameters” button to open the dialog box where you can set the gateway parameters.

Figure 41: Setting the parameters of the BL20 gateway

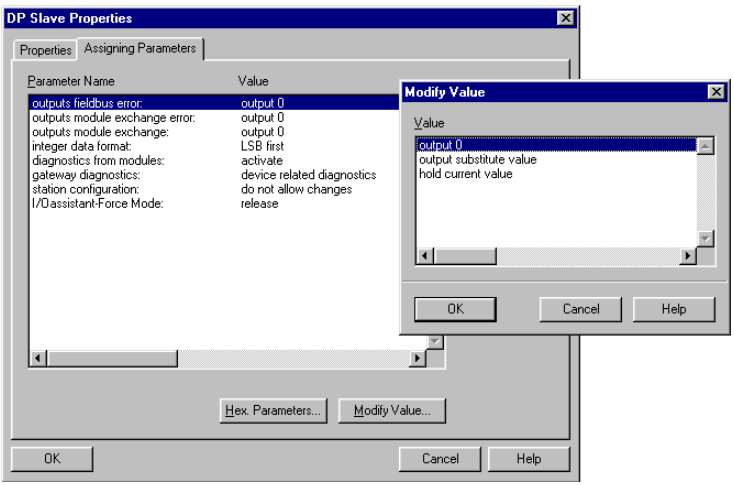

The parameters are displayed in text form by default. You can switch to the hexadecimal form by using the “Hex. Parameters...” button. You can find an assignment table for hexadecimal to text descriptions of the individual parameters in the “Appendix“.

Double-click a parameter or click the “Modify Value...” button to open the dialog box with the relevant options for setting the parameters.

The meaning of the gateway parameters are described in the Section “Setting Parameters“, chapter 2.

Configuring the BL20 Station

To configure your BL20 station, place the required module into the list of the corresponding station from the hardware catalog using the drag-and-drop feature. The list is opened by clicking on the appropriate BL20 station.

Figure 42: Selecting a BL20 module

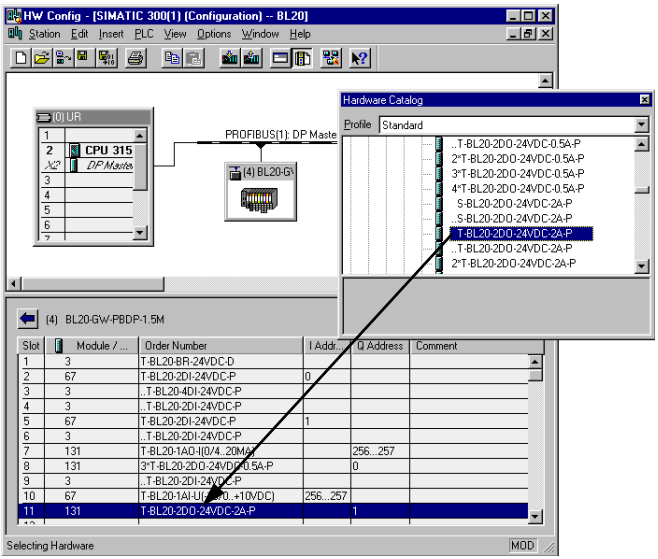

Setting Parameters for BL20 modules

If BL20 modules are entered whose parameters can be set, it is possible to open the dialog box with the relevant options by double-clicking the corresponding module.

The parameters of the individual BL20 modules are described in chapter 4.

Error Diagnostics (Station Diagnostics) when connected to a Siemens S7 PLC

SIMATIC Manager's diagnostic functions are described in the manual, which is supplied with the software by Siemens.

Information concerning individual module diagnostics can be found in chapter 4. Diagnostic options for gateways are described in chapter 2.

Diagnostics on PROFIBUS-DP

Diagnostic messages in the PLC

The diagnostic messages are indicated as diagnostic bytes in the software of the corresponding PROFIBUS-DP master. Please refer to Table 8 and Table 9 in chapter 2 of this manual for the meaning of the gateway's diagnostic bytes and those of the connected modules.

Based on an example station taken from the section “Electronic Device Data Sheets (GSD)“, the following will illustrate how the diagnostic bytes of the modules in the controller software are displayed.

Table 70: Diagnostic bytes of the example station

Module		Number of diagnostic bytes	Diagnostic bytes in PROFIBUS-DP
GW	BL20-GW-PBDP-1.5MB	3	7 to 9
A	BL20-BR-24VDC-D	1	10
B	BL20-2DI-24VDC-P	-	-
C	BL20-4DI-24VDC-P	-	-
D	BL20-2DI-24VDC-P	-	-
E	BL20-2DI-24VDC-P	-	-
F	BL20-2DI-24VDC-P	-	-
G	BL20-1AO-I(0/4...20MA)	1	11
H	BL20-2DO-24VDC-0.5A-P	1	12
I	BL20-2DO-24VDC-0.5A-P	1	13
J	BL20-2DO-24VDC-0.5A-P	-	-
K	BL20-2DI-24VDC-P	1	14
L	BL20-1AI-U(-10/0...+10VDC)	1	15
M	BL20-2DO-24VDC-2A-P		

Those modules that do not transmit diagnostic bytes do not appear in the diagnostic evaluation of the PROFIBUS-DP master. Those modules, which are capable of diagnostics, appear in the order in which they are plugged within the station.

Table 71: Description and meaning of the diagnostic bytes

Module		Meaning	Diag. Byte
(Header according to PROFIBUS-DP standards)		Status of station	Byte 1
		Status of station	Byte 2
		Status of station	Byte 3
		Address of diagnostic master	Byte 4
		Identity-number high byte	Byte 5
		Identity-number low byte	Byte 6
GW	BL20-GW-DP	Gateway diagnostic byte 0 (Length recognition and type of DP diagnostic)	Byte 7
GW	BL20-GW-DP	Gateway diagnostic byte 1 (gateway warning)	Byte 8
GW	BL20-GW-DP	Gateway diagnostic byte 2 (gateway error)	Byte 9
A	BL20-BR-24VDC-D	Module diagnostic	Byte 10
H	BL20-2DO-24VDC-0.5A-P	Module diagnostic	Byte 11
I	BL20-2DO-24VDC-0.5A-P	Module diagnostic	Byte 12

Module		Meaning	Diag. Byte
J	BL20-2DO-24VDC-0.5A-P	Module diagnostic	Byte 13
L	BL20-1AI-U(-10/0...+10VDC)	Module diagnostic	Byte 14
M	BL20-2DO-24VDC-2A-P	Module diagnostic	Byte 15

The diagnostic information can be queried for diagnostic evaluation by using certain configuration tools or via special manufacturer-specific function block units.

The Siemens S7 PLC (PROFIBUS-DP (Master) evaluates the diagnostic information from the PROFIBUS-DP slaves with a special function block, which can be obtained directly from Siemens.

Example of Diagnostics with a Siemens S7-400 PLC

The software STEP 7, version 5.0.2.0 from Siemens, is used in our example to describe diagnostic messages in the PLC (S7-400). The make-up of the station corresponds to the BL20 station described in the Section “Connection to a Siemens S7 PLC“ in this chapter.

Note

The „device related diagnostic format“ is used in this example. That means, the gateway diagnostic bytes and the diagnostic bytes for all modules of the BL20 station are decripted which are capable for diagnostics.

The variables table VAT1 is used to display the diagnostic messages:

Note

The function block unit FB99, which is available from Siemens, has to be programmed in the PLC program before using the variables table VAT1. DB99 is used here as the instance DB.

Figure 43: Diagnostics description in the software STEP 7 - table of variables VAT1

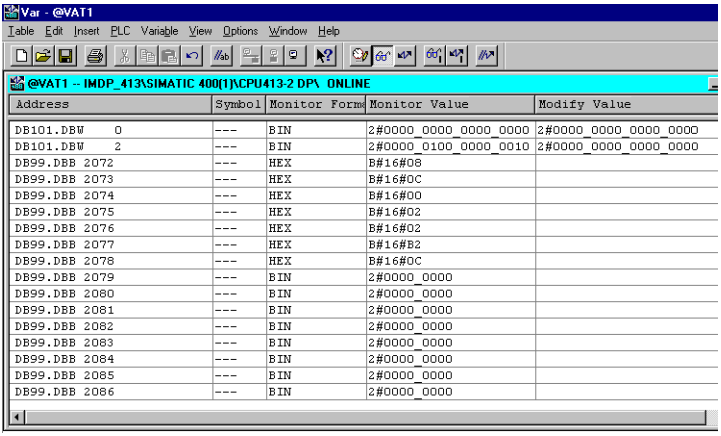

Address	Symbol	Monitor Forma	Monitor Value	Modify Value
DB101.DBW 0	---	BIN	2#0000_0000_0000_0000	2#0000_0000_0000_0000
DB101.DBW 2	---	BIN	2#0000_0100_0000_0010	2#0000_0000_0000_0000
DB99.DBB 2072	---	HEX	B#16#08	
DB99.DBB 2073	---	HEX	B#16#0C	
DB99.DBB 2074	---	HEX	B#16#00	
DB99.DBB 2075	---	HEX	B#16#02	
DB99.DBB 2076	---	HEX	B#16#02	
DB99.DBB 2077	---	HEX	B#16#B2	
DB99.DBB 2078	---	HEX	B#16#0C	
DB99.DBB 2079	---	BIN	2#0000_0000	
DB99.DBB 2080	---	BIN	2#0000_0000	
DB99.DBB 2081	---	BIN	2#0000_0000	
DB99.DBB 2082	---	BIN	2#0000_0000	
DB99.DBB 2083	---	BIN	2#0000_0000	
DB99.DBB 2084	---	BIN	2#0000_0000	
DB99.DBB 2085	---	BIN	2#0000_0000	
DB99.DBB 2086	---	BIN	2#0000_0000	

The operands in the left column have the following meaning::

Table 72: Operands legend

Operand	Status value	Meaning
DB101.DBW	0	PLC-internal information
DB101.DBW	2	PLC-internal information
DB99.DBB 2072	B#16#08	Station status byte
DB99.DBB 2073	B#16#0C	Station status byte
DB99.DBB 2074	B#16#00	Station status byte 3
DB99.DBB 2075	B#16#02	Address of diagnostic master
DB99.DBB 2076	B#16#02	Identity-number high byte
DB99.DBB 2077	B#16#B2	Identity-number low byte
DB99.DBB 2078	B#16#0C	Gateway diagnostic byte 0 (Length recognition and type of DP diagnostic)
DB99.DBB 2079	2#0000_0000	Gateway diagnostic byte 1 (gateway warning)
DB99.DBB 2080	2#0000_0000	Gateway diagnostic byte 2 (gateway error)
DB99.DBB 2081	2#0000_0000	Diagnostic byte module 1
DB99.DBB 2082	2#0000_0000	Diagnostic byte module 2
DB99.DBB 2083	2#0000_0000	Diagnostic byte module 3
DB99.DBB 2084	2#0000_0000	Diagnostic byte module 4
DB99.DBB 2085	2#0000_0000	Diagnostic byte module 5
DB99.DBB 2086	2#0000_0000	Diagnostic byte module 6

The in grey highlighted operands correspond to the standard header of PROFIBUS-DP standards. The diagnostic bits and bytes for the gateway and the BL20 modules are descripted in chapter 2.

The representation of the diagnostic messages in the table VAT1 is updated following a renewed diagnosis.

Industrial Automation

Diagnostic messages were provoked for the following examples:

- Short circuit in a digital output module
- Planned but not plugged I/O module
- Interruption of the field voltage

Short-Circuit in a Digital Output Module

Figure 44: Diagnosis when a short-circuit occurs in an output module

Var - @VAT1

Table Edit Insert PLC Variable View Options Window Help

@VAT1 -- XION_Station\S7 Program(1)\ ONLINE

Address	Symbol	Monitor Format	Monitor Value	Modify
DB100.DBW 0	---	BIN	2#0000_0000_0000_0000	
DB100.DBW 2	---	BIN	2#0000_0000_0000_0000	
DB99.DBB 2072	"Diagnostics".DIAG_DAT_NORM[1]	HEX	B#16#08	
DB99.DBB 2073	"Diagnostics".DIAG_DAT_NORM[2]	HEX	B#16#0C	
DB99.DBB 2074	"Diagnostics".DIAG_DAT_NORM[3]	HEX	B#16#00	
DB99.DBB 2075	"Diagnostics".DIAG_DAT_NORM[4]	HEX	B#16#01	
DB99.DBB 2076	"Diagnostics".DIAG_DAT_NORM[5]	HEX	B#16#02	
DB99.DBB 2077	"Diagnostics".DIAG_DAT_NORM[6]	HEX	B#16#B2	
DB99.DBB 2078	"Diagnostics".DIAG_DAT_NORM[7]	HEX	B#16#05	
DB99.DBB 2079	"Diagnostics".DIAG_DAT_NORM[8]	BIN	2#0000_0001 **A**	
DB99.DBB 2080	"Diagnostics".DIAG_DAT_NORM[9]	BIN	2#0000_0000	
DB99.DBB 2081	"Diagnostics".DIAG_DAT_NORM[10]	BIN	2#0000_0000	
DB99.DBB 2082	"Diagnostics".DIAG_DAT_NORM[11]	BIN	2#0000_0000	
DB99.DBB 2083	"Diagnostics".DIAG_DAT_NORM[12]	BIN	2#0000_0001 **B**	
DB99.DBB 2084	"Diagnostics".DIAG_DAT_NORM[13]	BIN	2#0000_0000	
DB99.DBB 2085	"Diagnostics".DIAG_DAT_NORM[14]	BIN	2#0000_0000	
DB99.DBB 2086	"Diagnostics".DIAG_DAT_NORM[15]	BIN	2#0000_0000	

A Gateway diagnostic byte 1, bit 0 “Module diagnostics available“

B Diagnostic byte module 3 (BL-2DO-24VDC-0.5A-P), bit 0 “Overcurrent“

In this example, a short-circuit in channel 1 of a digital output module was provoked. As a result, the “DIA“ LED on the gateway indicated that the gateway was generating an extended diagnosis by flashing red. The LED’s “DIA“ and “11“ of the digital output module lit up red.

The normal status was restored to the LED indicators by repairing the short-circuit.

Note

The default settings for the gateway parameters set all outputs to zero (please refer to the section „Setting Parameters“, chapter 2). It is not possible to diagnose any short-circuits which may arise if modules planned for a station are not plugged. For this reason, it is recommended to set the corresponding gateway parameters to “Hold current value“.

Planned but not plugged I/O Module

Figure 45: Diagnosis with a not-plugged BL20 I/O module

Var - @VAT1

Table Edit Insert PLC Variable View Options Window Help

@VAT1 -- XION_Station\S7 Program(1)\ ONLINE

Address	Symbol	Monitor Format	Monitor Value	Modify
DB100.DBW 0	---	BIN	2#0000_0000_0000_0000	
DB100.DBW 2	---	BIN	2#0000_0000_0000_0000	
DB99.DBB 2072	"Diagnostics".DIAG_DAT_NORM[1]	HEX	B#16#08	
DB99.DBB 2073	"Diagnostics".DIAG_DAT_NORM[2]	HEX	B#16#0C	
DB99.DBB 2074	"Diagnostics".DIAG_DAT_NORM[3]	HEX	B#16#00	
DB99.DBB 2075	"Diagnostics".DIAG_DAT_NORM[4]	HEX	B#16#01	
DB99.DBB 2076	"Diagnostics".DIAG_DAT_NORM[5]	HEX	B#16#02	
DB99.DBB 2077	"Diagnostics".DIAG_DAT_NORM[6]	HEX	B#16#B2	
DB99.DBB 2078	"Diagnostics".DIAG_DAT_NORM[7]	HEX	B#16#05	
DB99.DBB 2079	"Diagnostics".DIAG_DAT_NORM[8]	BIN	2#0000_1000 **A**	
DB99.DBB 2080	"Diagnostics".DIAG_DAT_NORM[9]	BIN	2#0000_0000	
DB99.DBB 2081	"Diagnostics".DIAG_DAT_NORM[10]	BIN	2#0000_0000	
DB99.DBB 2082	"Diagnostics".DIAG_DAT_NORM[11]	BIN	2#0000_0000	
DB99.DBB 2083	"Diagnostics".DIAG_DAT_NORM[12]	BIN	2#0000_0000	
DB99.DBB 2084	"Diagnostics".DIAG_DAT_NORM[13]	BIN	2#0000_0000	
DB99.DBB 2085	"Diagnostics".DIAG_DAT_NORM[14]	BIN	2#0000_0000	
DB99.DBB 2086	"Diagnostics".DIAG_DAT_NORM[15]	BIN	2#0000_0000	

A Gateway diagnostic byte 1, bit 3 “Station configuration changed“

In this example, a planned BL20 module was pulled. As a result, the “IOs” LED on the gateway indicated an acceptable change to the physical constellation of the module bus station by flashing alternately red/green. The flashing red “DIA” LED indicated that the gateway was generating an extended diagnosis.

The normal status was restored by replugging the pulled electronics module.

Interruption of the Field Voltage

Figure 46: Diagnosis when the power supply to the field is interrupted

Var - @VAT1

Table Edit Insert PLC Variable View Options Window Help

@VAT1 -- XION_Station\S7 Program(1)\ ONLINE

Address	Symbol	Monitor Format	Monitor Value	Modify
DB100.DBW 0	---	BIN	2#0000_0000_0000_0000	
DB100.DBW 2	---	BIN	2#0000_0000_0000_0000	
DB99.DBB 2072	"Diagnostics".DIAG_DAT_NORM[1]	HEX	B#16#08	
DB99.DBB 2073	"Diagnostics".DIAG_DAT_NORM[2]	HEX	B#16#0C	
DB99.DBB 2074	"Diagnostics".DIAG_DAT_NORM[3]	HEX	B#16#00	
DB99.DBB 2075	"Diagnostics".DIAG_DAT_NORM[4]	HEX	B#16#01	
DB99.DBB 2076	"Diagnostics".DIAG_DAT_NORM[5]	HEX	B#16#02	
DB99.DBB 2077	"Diagnostics".DIAG_DAT_NORM[6]	HEX	B#16#B2	
DB99.DBB 2078	"Diagnostics".DIAG_DAT_NORM[7]	HEX	B#16#05	
DB99.DBB 2079	"Diagnostics".DIAG_DAT_NORM[8]	BIN	2#0000_0001 **A**	
DB99.DBB 2080	"Diagnostics".DIAG_DAT_NORM[9]	BIN	2#0000_0000	
DB99.DBB 2081	"Diagnostics".DIAG_DAT_NORM[10]	BIN	2#0000_0100 **B**	
DB99.DBB 2082	"Diagnostics".DIAG_DAT_NORM[11]	BIN	2#0000_0000	
DB99.DBB 2083	"Diagnostics".DIAG_DAT_NORM[12]	BIN	2#0000_0000	
DB99.DBB 2084	"Diagnostics".DIAG_DAT_NORM[13]	BIN	2#0000_0000	
DB99.DBB 2085	"Diagnostics".DIAG_DAT_NORM[14]	BIN	2#0000_0000	
DB99.DBB 2086	"Diagnostics".DIAG_DAT_NORM[15]	BIN	2#0000_0000	

A Gateway diagnostic byte 1, bit 0 “Module diagnostics available“

B Diagnostic byte module 1 (BL20-BR-24VDC-D), bit 2 “Undervoltage field supply“

In this example the connection between the Bus Refreshing module and the voltage source for the power supply to the field was interrupted. As a result, the gateway “DIA” LED indicated an extended diagnosis by flashing red. At the same time the LED “UL” on the Bus Refreshing module was extinguished and a pending diagnosis was indicated by the module’s “DIA” LED flashing red.

The normal status was restored by re-establishing the connection to the field voltage.

5 Guidelines for Station Planning

Module Arrangement on the Mounting Rail 2

Random Module Arrangement 2
Complete Planning 2
Maximum System Extension 3
Maximum System extension with the Standard gateway 11
Overview of the process data, diagnostic, parameter and configuration bytes based on an example 11

Power Supply 14

Power Supply to the Gateway 14
Module Bus Refreshing 14
Creating Potential Groups 20
Protecting the Service Interface on the Gateway 22
C-Rail (Cross Connection) 23
Direct Wiring of Relay Modules 25

Plugging and Pulling Electronics Modules 26

Extending an Existing Station 27

Firmware Download 28

Module Arrangement on the Mounting Rail

Random Module Arrangement

The arrangement of the I/O modules within a BL20 station can basically be chosen at will. Nevertheless, it can be useful with some applications to group certain modules together.

Note

The mixed usage of base modules with screw connections and base modules with tension clamp connections requires a futher power supply module to be mounted. Thereby, it must be ensured that the base modules are fitted with the same connection technology (screw or tension clamp) as the power supply module.

Complete Planning

The planning of a BL20 station should be thorough to avoid faults and increase operating reliability.

Attention

If there are more than two empty slots next to one another, the communication is interrupted to all following BL20 modules.

The power to BL20 systems is supplied from a common external source, independent of the number of Bus Refreshing modules on the station. This avoids the occurrence of potential compensating currents within the BL20 station.

Maximum System Extension

A BL20 station can consist of a gateway and a maximum of 74 modules in slice design (equivalent to 1 m in length of mounting rail including the end bracket and endplate).

The limit placed on the maximum possible number of channels is based on the number of bytes of the process data, diagnostics, parameters as well as the configuration bytes of the BL20 modules, these being limited by the field controller used in the

BL20 station. The following are maximum possible bytes available in a BL20 station:

- Process data bytes
  176 Bytes
- Diagnostic bytes
  64 Bytes
  (61 Bytes module diagnostics + 3 Bytes gateway diagnostics)
- Parameter bytes
  117 Bytes
  (115 Bytes module parameters + 2 Bytes gateway parameters)
- Configuration bytes
  176 Bytes

Further limitations are imposed by the method of data description (standard or according to type) or by the method of module description (compressed or not compressed).

The following overview shows the maximum number of channels possible under these conditions:

- The entire station is made up of the resective channel type only
- The transmission to PROFIBUS-DP is supported only until the maximum possible 61 diagnostic bytes is reached. The diagnistics of the following modules are not taken in to consideration.

Maximum system extension, process data dependent:

Channels		**Modules**		**Module description in the GSD file**	
Type	Max. no.	Type	Max. no.	Type of GSD file	Module description
Digital inputs	288	BL20-4DI-24VDC-P	72 **A**	Standard	Not compressed
Digital outputs	288	BL20-4DO-24VDC-0.5A-P	72 **A**	Standard	Not compressed
Analog inputs, current	78	BL20-2AI-I(0/4...20MA)	39 **A**	Standard	Not compressed
Analog inputs, voltage	78	BL20-2AI-U(-10/0...+10VDC)	39 **A**	Standard	Not compressed
Analog inputs, PT/Ni	46	BL20-2AI-PT/NI-2/3	23 **B**	Standard	Not compressed
Analog inputs, thermocouple	76	BL20-2AI-THERMO-PI	38 **A**	Standard	Not compressed
Analog outputs, current	38	BL20-2AO-I(0/4...20MA)	19 **B**	According to type	Not compressed
Analog outputs, voltage	38	BL20-2AO-U(-10/0...+10VDC)	19 **B**	According to type	Not compressed
Counter	7/7	BL20-1CNT-24VDC	7 **B**	Standard	Not compressed
RS232 interface	15	BL20-1RS232	15	Standard	Not compressed
RS485/422 interface	22	BL20-1RS485/422	22	Standard	Not compressed
SSI interface	22	BL20-1SSI	22	Standard	Not compressed

A plus 2 Bus Refreshing modules BL20-BR-24VDC-D

B plus 1 Bus Refreshing module BL20-BR-24VDC-D

The following overview shows the maximum possible number of channels, taking in to consideration the number of module-specific diagnostic bytes.

Maximum system extension, process and diagnostic data dependent :

Channels		**Modules**		**Module description in the GSD file**
Type	Max. no.	Type	Max. no.	Type of GSD file
Digital inputs	288	BL20-4DI-24VDC-P	72 **A**	Standard
Digital outputs	288	BL20-2DO-24VDC-2A-P	72 **A**	Standard
Analog inputs, current	78	BL20-2AI-I(0/4...20MA)	39 **A**	Standard
Analog inputs, voltage	78	BL20-2AI-U(-10/0...+10VDC)	39 **A**	Standard
Analog inputs, PT / Ni	46	BL20-2AI-PT/NI-2/3	23 **B**	Standard
Analog inputs, thermocouple	58	BL20-2AI-THERMO-PI	29 **A**	Standard
Analog outputs, current	38	BL20-2AO-I(0/4...20MA)	19 **B**	According to type
Analog outputs, voltage	38	BL20-2AO-U(-10/0...+10VDC)	19 **B**	According to type
Counter	7/ 7	BL20-1CNT-24VDC	7 **B**	Standard
RS232 interface	15	BL20-1RS232	15	Standard
RS485/422 interface	22	BL20-1RS485/422	22	Standard
SSI interface	22	BL20-1SSI	22	Standard

A plus 2 Bus Refreshing modules BL20-BR-24VDC-D

B plus 1 Bus Refreshing module BL20-BR-24VDC-D

The following table offers an overview of the process data, diagnostic, parameter and configuration bytes of the individual BL20 modules:

Overview of the process data and diagnostic bytes:

BL20 Module	Process data bytes		Diagnostic bytes
	Not compressed	Compressed as follow-up	
Gateway	–	–	2
BL20-BR-24VDC-D	0	–	1
BL20-PF-24VDC-D	0	–	1
BL20-PF-120/230VAC-D	0	–	1
BL20-2DI-24VDC-P	1	0	0
BL20-2DI-24VDC-N	1	0	0
BL20-2DI-120/230VAC	1	0	0
BL20-4DI-24VDC-P	1	0	0
BL20-4DI-24VDC-N	1	0	0
BL20-16DI-24VDC-P	2	–	0
BL20-32DI-24VDC-P	4	–	0
BL20-1AI-I(0/4...20MA)	2	–	1
BL20-2AI-I(0/4...20MA)	4	–	2
BL20-1AI-U(-10/0...+10VDC)	2	–	1
BL20-2AI-U(-10/0...+10VDC)	4	–	2
BL20-2AI-PT/NI-2/3	4	–	2
BL20-2AI-THERMO-PI	4	–	2
BL20-2DO-24VDC-2A-P	1	0	1
BL20-2DO-24VDC-0.5A-P	1	0	1
BL20-2DO-24VDC-0.5A-N	1	0	1

BL20 Module	Process data bytes		Diagnostic bytes
	Not compressed	Compressed as follow-up	
BL20-4DO-24VDC-0.5A-P	1	0	1
BL20-16DO-24VDC-0.5A-P	2	–	1
BL20-1AO-I(0/4...20MA)	2	–	0
BL20-2AO-I(0/4...20MA)	4	–	0
BL20-2AO-U(-10/0...+10VDC)	4	–	0
BL20-2DO-R-NC	1	0	0
BL20-2DO-R-NO	1	0	0
BL20-2DO-R-CO	1	0	0
BL20-1CNT-24VDC	8 (Input)/ 8 (Output)	–	1
BL20-1RS232	8 (Input)/ 8 (Output)	–	1
BL20-1RS485/422	8 (Input)/ 8 (Output)	–	1
BL20-1SSI	8 (Input)/ 8 (Output)	–	1

A With compressed module description as follow-up module 2 bytes

B With compressed module description as follow-up module 4 bytes

Overview of the parameter and configuration bytes:

BL20 Module	**Module description**			
	Standard		**According to type**	
	Parameter bytes	Configuration bytes	Parameter bytes	Configuration bytes
Gateway	5	0	5	0
BL20-BR-24VDC-D	–	–	0	4
BL20-PF-24VDC-D	–	–	0	4
BL20-PF-120/230VAC-D	–	–	0	4
BL20-2DI-24VDC-P	1	1 **A**	0	5 **B**
BL20-2DI-24VDC-N	1	1 **A**	0	5 **B**
BL20-2DI-120/230VAC	1	1 **A**	0	5 **B**
BL20-4DI-24VDC-P	1	1 **A**	0	5 **B**
BL20-4DI-24VDC-N	1	1 **A**	0	5 **B**
BL20-16DI-24VDC-P	1	1 **A**	0	5 **B**
BL20-32DI-24VDC-P	1	1 **A**	0	5 **B**
BL20-1AI-I(0/4...20MA)	2	1	1	5
BL20-2AI-I(0/4...20MA)	3	1	2	5
BL20-1AI-U(-10/0...+10VDC)	2	1	1	5
BL20-2AI-U(-10/0...+10VDC)	3	1	2	5
BL20-2AI-PT/NI-2/3	5	1	4	5
BL20-2AI-THERMO-PI	3	1	2	5
BL20-2DO-24VDC-2A-P	1	1 **A**	0	5 **B**
BL20-2DO-24VDC-0.5A-P	1	1 **A**	0	5 **B**
BL20-2DO-24VDC-0.5A-N	1	1 **A**	0	5 **B**
BL20-4DO-24VDC-0.5A-P	1	1 **A**	0	5 **B**

BL20 Module	Module description			
	Standard		According to type	
	Parameter bytes	Configuration bytes	Parameter bytes	Configuration bytes
BL20-16DO-24VDC-0.5A-P	1	1 **A**	0	5 **B**
BL20-1AO-I(0/4...20MA)	4	1	3	5
BL20-2AO-I(0/4...20MA)	7	1	6	5
BL20-2AO-U(-10/0...+10VDC)	7	1	6	5
BL20-2DO-R-NC	1	1 **A**	0	5 **B**
BL20-2DO-R-NO	1	1 **A**	0	5 **B**
BL20-2DO-R-CO	1	1 **A**	0	5 **B**
BL20-1CNT-24VDC	17	1	16	6
BL20-1RS232	5	1	4	6
BL20-1RS485/422	5	1	4	6
BL20-1SSI	5	1	4	6

A With compressed module description as follow-up module 2 bytes

B With compressed module description as follow-up module 4 bytes

The bytes of the modules can be described in a compressed form, depending on the description of the modules in the GSD files. Examples can be found in chapter 3.

Attention

Ensure that a sufficient number of Power Feeding or Bus Refreshing modules are used if the system is extended to its maximum.

Note

If the system limits are exceeded, the software I/O-ASSISTANT generates an error message when the user activates the command “Station →Verify“.

Maximum System extension with the Standard gateway

Warning

If more than 4 modules in block design, or more than 15 modules in total are used, then the gateway (BL20-GW-PBDP-12MB-STD does not operate any module that follows the maximum allowed (from the 5th module in block design or the 16th module onwards). There is no communication with the excessive modules via the module bus. The LED „DIA" of these modules lights up red.

Overview of the process data, diagnostic, parameter and configuration bytes based on an example

The following offers an overview of the different bytes of an example station. The composition of this station is described in chapter 3 of the BL20 manual.

Figure 47: Example station

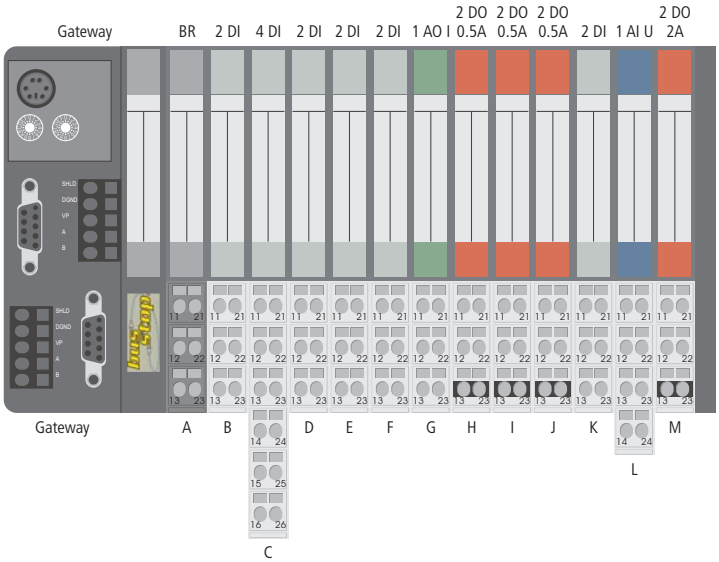

Overview of the process data and diagnostic bytes of the example station:

BL20 Module	**Process data bytes**		**Diagostic bytes**
	U **A**	G **A**	
Gateway	–	–	2
BL20-BR-24VDC-D	0	–	1
BL20-2DI-24VDC-P	1	1	0
BL20-4DI-24VDC-P	1	1	0
BL20-2DI-24VDC-P	1	1	0
BL20-2DI-24VDC-P	1	0	0
BL20-2DI-24VDC-P	1	0	0
BL20-1AO-I(0/4...20MA)	2	2[3)]	0
BL20-2DO-24VDC-0.5A-P	1	1	1
BL20-2DO-24VDC-0.5A-P	1	0	1
BL20-2DO-24VDC-0.5A-P	1	0	1
BL20-2DI-24VDC-P	1	1	0
BL20-1AI-U(-10/0...+10VDC)	2	2[3)]	1
BL20-2DO-24VDC-2A-P	1	1	1
Total:	14	10	8

A Not compressed module description

B Compressed module description

C Module available in not compressed module description only

Overview of the parameter and configuration bytes of the example station

BL20 Module	Standard module description			Module description according to type		
	Parameter bytes	Configuration bytes		Parameter bytes	Configuration bytes	
		U **A**	G **B**		U **A**	G **B**
Gateway	5	0	0	5	0	0
BL20-BR-24VDC-D[3)]	(0	4	4) **C**	0	4	4
BL20-2DI-24VDC-P	1	1	1	0	5	5
BL20-4DI-24VDC-P	1	1	1	0	5	4
BL20-2DI-24VDC-P	1	1	1	0	5	4
BL20-2DI-24VDC-P	1	1	2	0	5	5
BL20-2DI-24VDC-P	1	1	2	0	5	4
BL20-1AO-I(0/4...20MA)	4	1	1	3	5	5
BL20-2DO-24VDC-0.5A-P	1	1	1	0	5	5
BL20-2DO-24VDC-0.5A-P	1	1	2	0	5	4
BL20-2DO-24VDC-0.5A-P	1	1	2	0	5	4
BL20-2DI-24VDC-P	1	1	1	0	5	4
BL20-1AI-U(-10/0...+10VDC)	2	1	1	1	5	5
BL20-2DO-24VDC-2A-P	1	1	1	0	5	4
Total:	21	16	20	9	64	57

A Not compressed module description

B Compressed module description

C Bus Refreshing module available in module description according to type only

Power Supply

Power Supply to the Gateway

Note

On a BL20 station including a gateway without integrated power supply unit, the first module to be mounted after the gateway is a Bus Refreshing module with either a BL20-P3x-SBB or a BL20-P4x-SBBC base module with tension clamp or screw connection.

Module Bus Refreshing

The number of BL20 modules that can be supplied by the gateway or a seperate Bus Refreshing module via the internal module bus depends on the respective nominal current consumption of the individual modules on the module bus..

Attention

The sum total of the nominal current consumption of the connected BL20 modules must not exceed 1.5 A .

The following examples show the calculation for the required number of Bus Refreshing modules:

Example 1:

The BL20 station consists of 20 BL20-1AI-I(0/4...20MA) modules. The number of additional Bus Refreshing modules required is calculated as follows:

Gateway		430 mA
20 BL20-1AI-I(0/4...20MA)	20 x 41 mA	820 mA
	Total:	1250 mA
Maximum permissible current via module bus:		1 500 mA

The calculation shows that no further Bus Refreshing module is required.

Example 2:

The BL20 station comprises 15 BL20-1AI-U(-10/0...+10VDC) modules, 10 BL20-2AO-U(-10/0...+10VDC) modules, 10 BL20-2DI-24VDC-P modules and 5 BL20-2DO-24VDC-0.5A-P modules.
The required number of Bus Refreshing modules is calculated as follows:

Gateway		430 mA
15 BL20-1AI-U(-10/0...+10VDC)	15 x 41 mA	615 mA
10 BL20-2AO-U(-10/0...+10VDC)	10 x 43 mA	430 mA
10 BL20-2DI-24VDC-P	10 x 28 mA	280 mA
5 BL20-2DO-24VDC-0.5A-P	5 x 32 mA	160 mA
	Total:	1 915 mA
Maximum permissible current via module bus:		1 500 mA

The calculation shows that an additional/further Bus Refreshing module is required at the latest following the last BL20-2AO module. This Bus Refreshing module is sufficient to supply the remaining modules.

Note

The power requirements of the BL20 gateway is to be considered when calculating the required number of Bus Refreshing modules.

The following table offers an overview of the nominal current consumption of the individual BL20 modules on the module bus:

Table 73: Nominal current consumption of the BL20 modules on the module bus

Module	Supply	Nominal current consumption
Gateway **with** integrated power supply unit	1 500 mA	430 mA
Gateway **without** integrated power supply unit		430 mA
(BL20-BR-24VDC-D) **A**	(1 500 mA)	
BL20-PF-24VDC-D		28 mA
BL20-PF-120/230VAC-D		25 mA
BL20-2DI-24VDC-P		28 mA
BL20-2DI-24VDC-N		28 mA
BL20-2DI-120/230VAC		28 mA
BL20-4DI-24VDC-P		29 mA
BL20-4DI-24VDC-N		28 mA
BL20-4DI-NAMUR		40 mA
BL20-E-8DI-24VDC-P		15 mA
BL20-E-16DI-24VDC-P		15 mA
BL20-16DI-24VDC-P		45 mA
BL20-32DI-24VDC-P		30 mA
BL20-1AI-I(0/4...20MA)		41 mA
BL20-2AI-I(0/4...20MA)		35 mA
BL20-1AI-U(-10/0...+10VDC)		41 mA
BL20-2AI-U(-10/0...+10VDC)		35 mA
BL20-2AI-PT/NI-2/3		45 mA

Module	Supply	Nominal current consumption
BL20-2AI-THERMO-PI		45 mA
BL20-4AI-U/I		30 mA
BL20-2DO-24VDC-0.5A-P		32 mA
BL20-2DO-24VDC-0.5A-N		32 mA
BL20-2DO-24VDC-2A-P		33 mA
BL20-2DO-120/230VAC-0.5A		35 mA
BL20-4DO-24VDC-0.5A-P		30 mA
BL20-E-8DO-24VDC-0.5A-P		15 mA
BL20-E-16DO-24VDC-0.5A-P		25 mA
BL20-16DO-24VDC-0.5A-P		120 mA
BL20-32DO-24VDC-0.5A-P		30 mA
BL20-1AO-I(0/4...20MA)		39 mA
BL20-2AO-I(0/4...20MA)		40 mA
BL20-2AO-U(-10/0...+10VDC)		43 mA
BL20-2DO-R-NC		28 mA
BL20-2DO-R-NO		28 mA
BL20-2DO-R-CO		28 mA
BL20-1CNT-24VDC		40 mA
BL20-1RS232		140 mA
BL20-1RS485/422		60 mA
BL20-1SSI		50 mA
BL20-2RFID		30 mA
BL20-E-1SWIRE		60 mA

If the power supply from the module bus is not guaranteed, thereby making a further Bus Refreshing module necessary, the software I/O-ASSISTANT generates an error message when the user activates the command “Station →Verify“.

Note

Bus Refreshing modules which do not supply the gateway with power are to be combined with either a BL20-P3T-SBB-B or a BL20-P4T-SBBC-B (tension clamp connection) base module or with the base modules BL20-P3S-SBB-B or BL20-P4S-SBBC-B (screw connection).

Figure 48: Power supply when using a gateway with integrated power supply unit

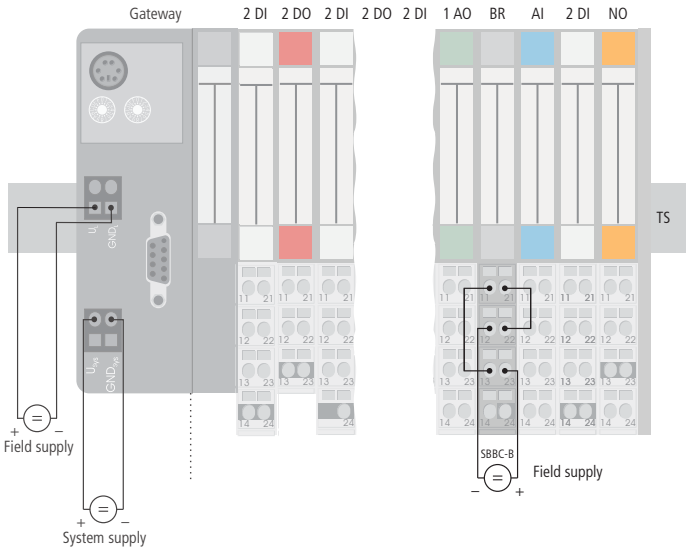

Figure 49: Possible supply options for Bus Refreshing modules when using a gateway without integrated power supply unit

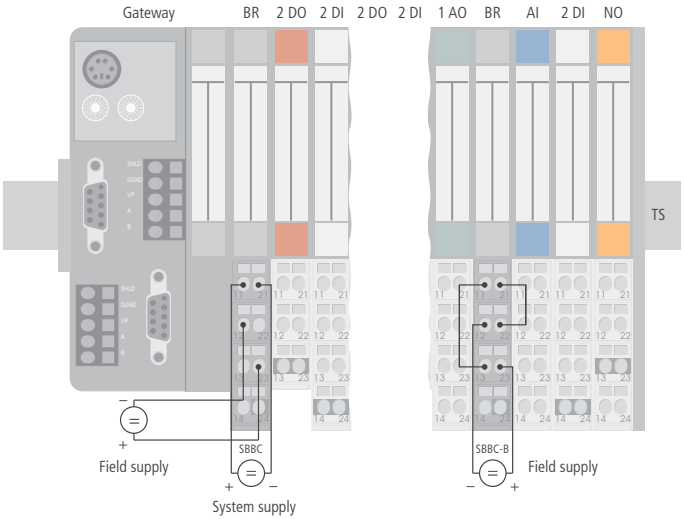

It must be ensured that the same ground potential and ground connections are used. If different ground potentials or ground connections are used, compensating currents flow via the module bus, which can lead to the destruction of the Bus Refreshing module.

All Bus Refreshing modules are connected to one another via the same ground potential.

The power to the module bus is supplied via the connections 11 and 21 on the base module.

Attention

In order to comply with radiation limit values in accordance with EN 55 011/ 2 000, the supply lines of the BL20-BR-24VDC-D module for supplying the gateway with power are to be fed through a ferrite ring (PS416-ZBX-405). This is to be placed immediately next to the connection terminals. From there on, it is not permitted to make connections to further devices.

Creating Potential Groups

Bus Refreshing and Power Feeding modules can be used to create potential groups. The potential isolation of potential groups to the left of the respective power distribution modules is provided by the base modules.

Attention

Ensure that the correct base modules are planned for when using Bus Refreshing modules.

Figure 50: Example for creating potential groups with BL20-GWBR-PBDP

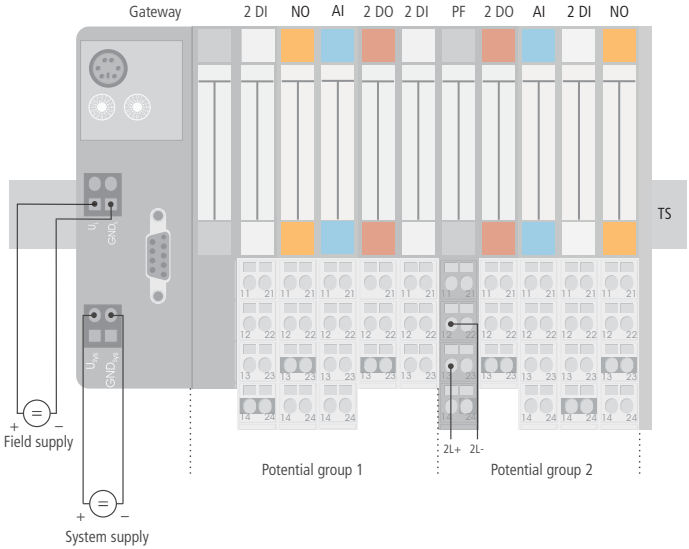

Figure 51: Example for creating potential groups with BL20-GW-PBDP-1.5MB

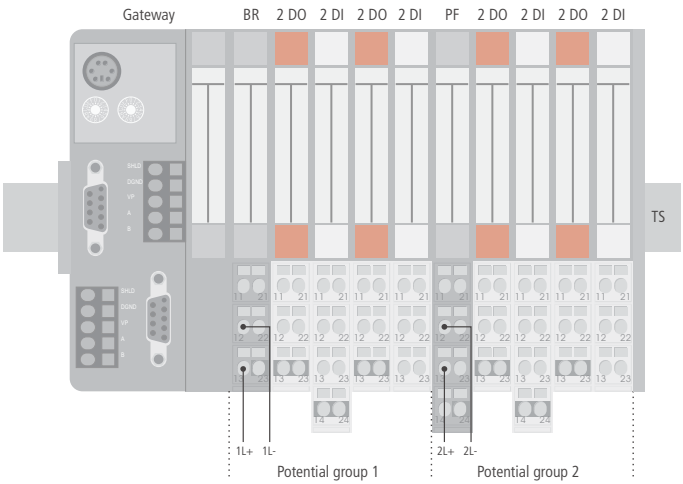

Note

The system can be supplied with power independent of the potential group formation described above.

When using a digital input module for 120/230 V AC, it should be ensured that a potential group is created in conjunction with the Power Feeding module BL20-PF-120/230VAC-D.

Attention

It is not permitted to use the modules with 24 V DC and 120/230 V AC field supply in a joint potential group.

Protecting the Service Interface on the Gateway

During operation, the cover protecting the service interface and the hexadecimal rotary coding-switches must remain closed due to EMC and ESD.

Figure 52: BL20 Gateway 1.5 MB with tension clamp connection

C-Rail (Cross Connection)

The C-rail runs through all base modules. The C-rail of the base modules for power distribution modules is mechanically separated; thus potentially isolating the adjoining supply groups.

Access to the C-rail is possible with the help of base modules with a C in their designation (for example, BL20-S4T-SBCS). The corresponding connection level is indicated on these modules by a thick black line. The black line is continuous on all I/O modules. On power distribution modules, the black line is only above the connection 24. This makes clear that the C-rail is separated from the adjoining potential group to its left.

Figure 53:
C-rail front view

Figure 54:
C-rail side view

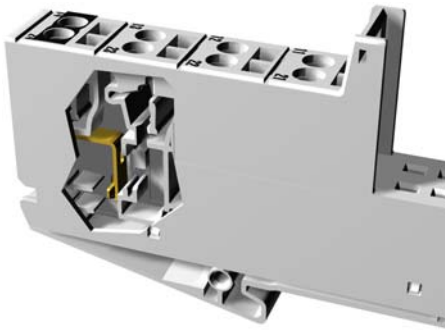

Warning

It is permitted to load the C-rail with a maximum of 24 V. Not 230 V!

The C-rail can be used as required by the application, for example, as a protective earth (PE). In this case, the PE connection of each power distribution module must be connected to the mounting rail via an additional PE terminal, which is available as an accessory.

Note

For information about introducing a BL20 station into a ground reference system, please read chapter 6.

Figure 55: Using the C-rail as a protective earth

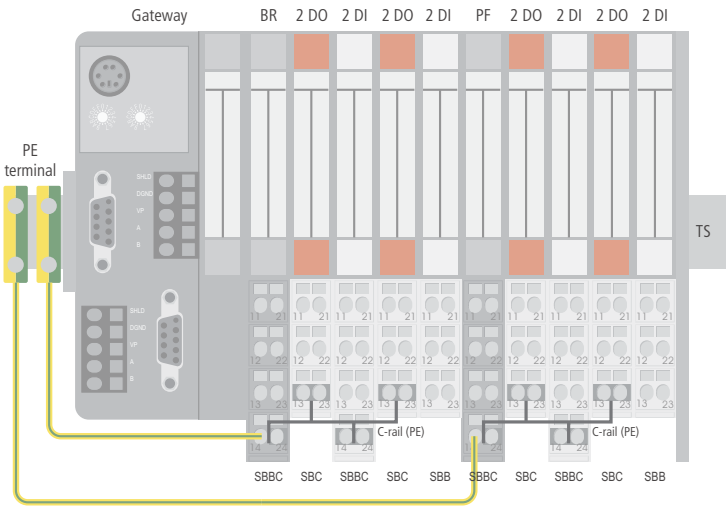

C-rails can be used for a common voltage supply when relay modules are planned. To accomplish this, the load voltage is connected to a Power Feeding module with the BL20-P4x-SBBC base module with tension clamp or screw connection. All the following relay modules are then supplied with power via the C-rail.

Attention

When relay modules are planned and the C-rail is used for a common voltage supply, a further power distribution module must be used for the potential isolation to the following modules. The C-rail can only again be used as a PE following potential isolation.

Figure 56: Using the C-rail as protective earth and for the power supply with relay modules

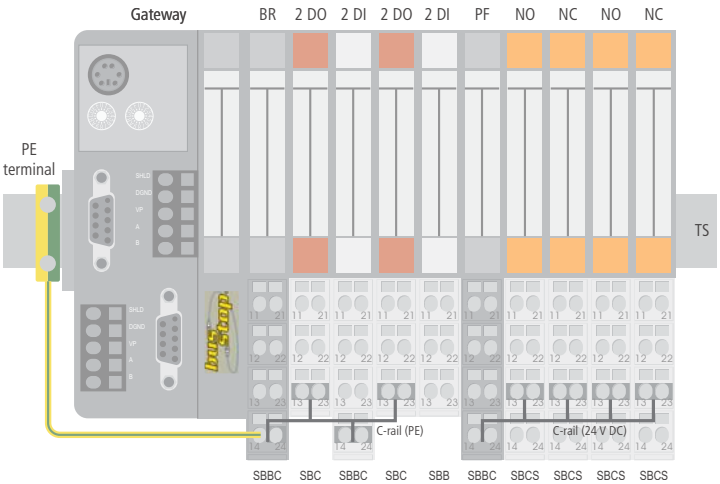

Cross-connecting relay module roots is achieved by the use of jumpers. The corresponding wiring diagram including the jumpers can be found in chapter 4.

Direct Wiring of Relay Modules

As well as the options mentioned above, relay modules can be wired directly. In this case, base modules without C-rail connections should be chosen to guarantee the potential isolation to the adjoining modules.

Plugging and Pulling Electronics Modules

BL20 enables the pulling and plugging of electronics modules without having to disconnect the field wiring. The BL20 station remains in operation if an electronics module is pulled. The voltage and current supplies as well as the protective earth connections are not interrupted.

Attention

If the field and system supplies remain connected when electronics modules are plugged or pulled, short interruptions to the module bus communications can occur in the BL20 station. This can lead to undefined statuses of individual inputs and outputs of different modules.

Extending an Existing Station

Attention

Please note that extensions to the station (mounting further modules) should be carried out only when the station is in a voltage-free state.

Firmware Download

Firmware can be downloaded via the service interface on the gateway using the software tool I/O-ASSISTANT. More information is available in the program's online help.

Attention

The station should be disconnected from the fieldbus when downloading.

Firmware must be downloaded by authorized personnel only.

The field level must be isolated.

6 Guidelines for Electrical Installation

General Notes **2**

– General 2
Cable Routing 2
– Cable Routing Outside Buildings 3
Lightning Protection 3
Transmission Cables 4
Cable Types 5

Potential Relationships **6**

General 6
Potential-Free Installation 7
Non-isolated Installation 7

Electromagnetic Compatibility (EMC) **8**

Ensuring Electromagnetic Compatibility 8
Grounding of Inactive Metal Components 8
– PE Connection 9
– Earth-Free Operation 9
– Mounting Rails 10
EMC Compliant Cabinet Installation 11
Shielding of cables 12
Potential Compensation 14
Switching Inductive Loads 16
Protection against Electrostatic Discharge (ESD) 16

Bus Connection **17**

– Wiring 18

Two-Pole Shield Connection **19**

General Notes

General

Cables should be grouped together, for example: signal cables, data cables, heavy current cables, power supply cables.

Heavy current cables and signal or data cables should always be routed in separate cable ducts or bundles. Signal and data cables must always be routed as close as possible to ground potential surfaces (for example support bars, cabinet sides etc.).

Cable Routing

Correct cable routing prevents or suppresses the reciprocal influencing of parallel routed cables.

Cable Routing Inside and Outside of Cabinets:

To ensure EMC-compatible cable routing, the cables should be grouped as follows:

Group 1:	shielded bus and data cables shielded analog cables unshielded cables for DC voltage ≤60 V unshielded cables for AC voltage ≤25 V
Group 2:	unshielded cables for DC voltage > 60 V and ≤400 V unshielded cables for AC voltage > 25 V and ≤400 V
Group 3:	unshielded cables for DC and AC voltages > 400 V

Various types of cables within the groups can be routed together in bundles or in cable ducts.

The following group combination can be routed only in separate bundles or separate cable ducts (no minimum distance apart):

- Group 1/Group 2

The group combinations:

- Group 1/Group 3 and Group 2/Group 3

must be routed in separate cable ducts with a minimum distance of 10 cm apart. This is equally valid for inside buildings as well as for inside and outside of switchgear cabinets.

Cable Routing Outside Buildings

Outside of buildings, cables should be routed in closed (where possible), cage-type cable ducts made of metal. The cable duct joints must be electrically connected and the cable ducts must be earthed.

Warning

Observe all valid guidelines concerning internal and external lightning protection and grounding specifications when routing cables outside of buildings.

Lightning Protection

The cables must be routed in double-grounded metal piping or in reinforced concrete cable ducts.

Signal cables must be protected against overvoltage by varistors or inert-gas filled overvoltage arrestors. Varistors and overvoltage arrestors must be installed at the point where the cables enter the building.

Transmission Cables

The bus stations are connected to one another via fieldbus cables, which comply with the RS 485 specifications and with DIN 19 245. Accordingly, the cable must have the following characteristics:

Table 74: Parameter of cable type A

Parameter	Cable A (DIN 19245, part 3)	Cable B (DIN 19245, part 1)
Characteristic impedance	35 to 165 Ω (3 to 20 MHz)	100 to 130 Ω (f >100 kHz)
Capacitance per unit length	< 30 nF/km	< 60 nF/km
Loop resistance	< 110 Ω/km	
Wire diameter	> 0.64 mm/ 0.025 inch	> 0.53 mm / 0.021 inch
Wire cross-section	> 0.34 mm^2 / 0.0005 $inch^2$	> 0.22 mm^2 / 0.0003 $inch^2$
Terminating resistor	220 Ω	150 Ω

Attention

According to information received from the PROFIBUS Users Organization, the use of Cable type “B” is not to be recommended.

Attention

The adherence to these parameters becomes more important the higher the baud rate, the more stations there are on the bus and the longer the length of the cable.

Figure 57: Representation of a PROFIBUS-DP cable

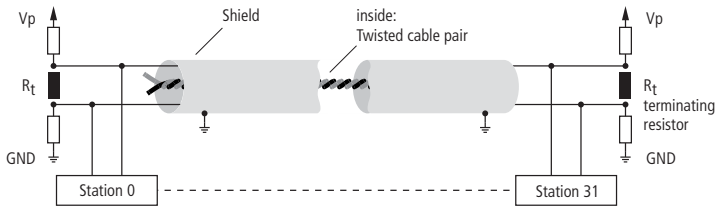

Cable Types

Turck offers a variety of cable types for fieldbus lines as premoulded or bulk cables with different connectors.

The ordering information for the available cable types can be found in the TURCK BL20 catalogs.

Potential Relationships

General

The potential relationship of a PROFIBUS-DP system realized with BL20 modules is characterized by the following:

- The system's power supply to the gateway, I/O modules and the field level is distributed via a Bus Refreshing module.
- All BL20 modules (gateway, Bus Refreshing, Power Feeding and I/O modules), are connected capacitively via base modules to the mounting rails.
- Separate power supplies for the system and the field level allow a potential-free installation.

The block diagram shows the arrangement of a typical BL20 station.

Figure 58: Block diagram of a BL20 system

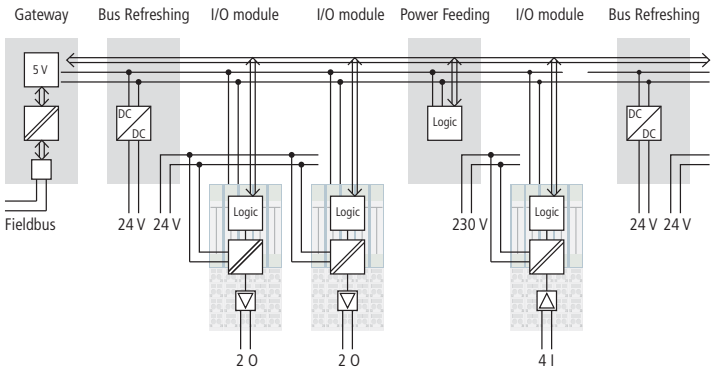

Potential-Free Installation

In a potential-free installation, the reference potentials of control and load circuitry are galvanically isolated from each other.

A potential-free installation is necessary with

- All AC load circuits (for example, when using the Power Feeding module BL20-PF-120/230VAC-D)
- Floating DC load circuits

The potential-free installation does not depend on the method of grounding.

Figure 59: Potential-free system and field supply

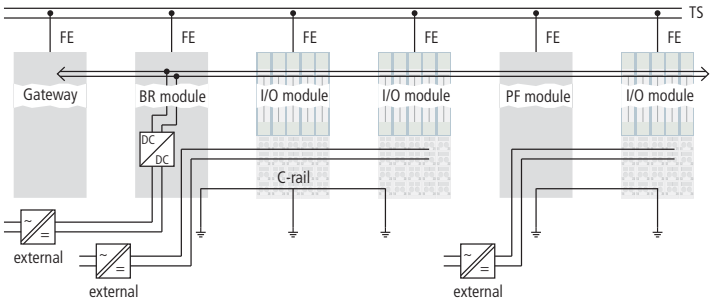

Non-isolated Installation

In a non-isolated installation, the reference potentials of the control and load circuitry are galvanically connected.

Figure 60: Non-isolated system and field supply

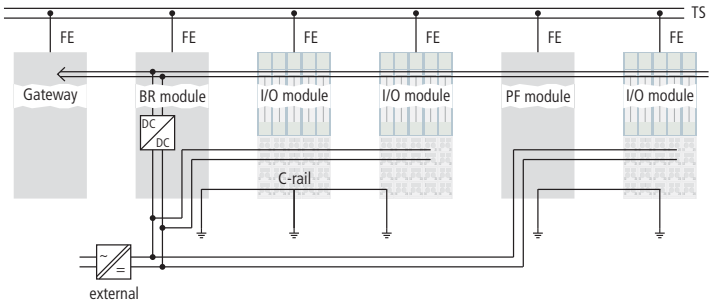

Electromagnetic Compatibility (EMC)

BL20 products comply in full with the requirements pertaining to EMC regulations. Nevertheless, an EMC plan should be made before installation. Hereby, all potential electromechanical sources of interference should be considered such as galvanic, inductive and capacitive couplings as well as radiation couplings.

Ensuring Electromagnetic Compatibility

The EMC of BL20 modules is guaranteed when the following basic rules are adhered to:

- Correct and large surface grounding of inactive metal components.
- Correct shielding of cables and devices.
- Proper cable routing – correct wiring.
- Creation of a standard reference potential and grounding of all electrically operated devices.
- Special EMC measures for special applications.

Grounding of Inactive Metal Components

All inactive metal components (for example: switchgear cabinets, switchgear cabinet doors, supporting bars, mounting plates, top-hat rails, etc.) must be connected to one another over a large surface area and with a low impedance (grounding). This guarantees a standardized reference potential area for all control elements and reduces the influence of coupled disturbances.

- In the areas of screw connections, the painted, anodized or isolated metal components must be freed of the isolating layer. Protect the points of contact against rust.
- Connect all free moving groundable components (cabinet doors, separate mounting plates, etc.) by using short bonding straps to large surface areas.
- Avoid the use of aluminum components, as its quick oxidizing properties make it unsuitable for grounding.

Warning

The grounding must never – including cases of error – take on a dangerous touch potential. For this reason, always protect the ground potential with a protective cable.

PE Connection

A central connection must be established between ground and PE connection (protective earth).

Earth-Free Operation

Observe all relevant safety regulations when operating an earth-free system.

Protection against high frequency interference signals.

Attention

In order to comply with radiation limit values in accordance with EN 55 011/2 000, the supply lines of the power distribution module BL20-BR-24VDC-D for supplying the gateway with power are to be fed through a ferrite ring (PS416-ZBX-405). This is to be placed immediately next to the connection terminals. From there on, it is not permitted to make connections to further devices.

Mounting Rails

All mounting rails must be mounted onto the mounting plate with a low impedance, over a large surface area, and must be correctly earthed.

Figure 61: Mounting options

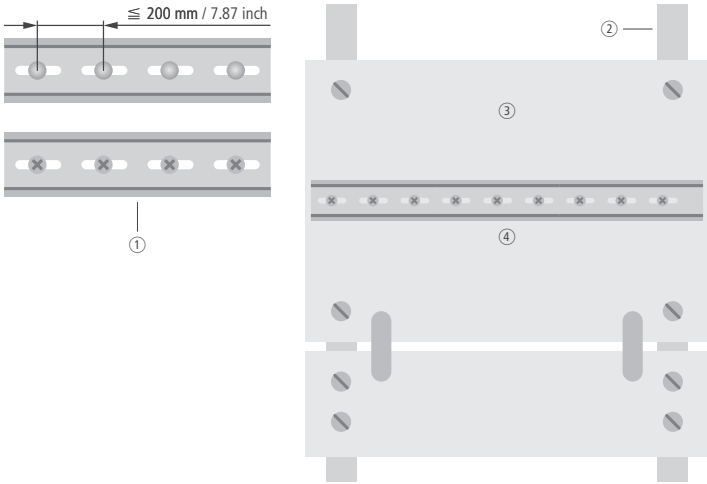

① TS 35 mounting rail

② Mounting rail

③ Mounting plate

④ TS 35 mounting rail

Mount the mounting rails over a large surface area and with a low impedance to the support system using screws or rivets.

Remove the isolating layer from all painted, anodized or isolated metal components at the connection point. Protect the connection point against corrosion (for example with grease; caution: use only suitable grease).

EMC Compliant Cabinet Installation

Figure 62: EMC compliant cabinet installation

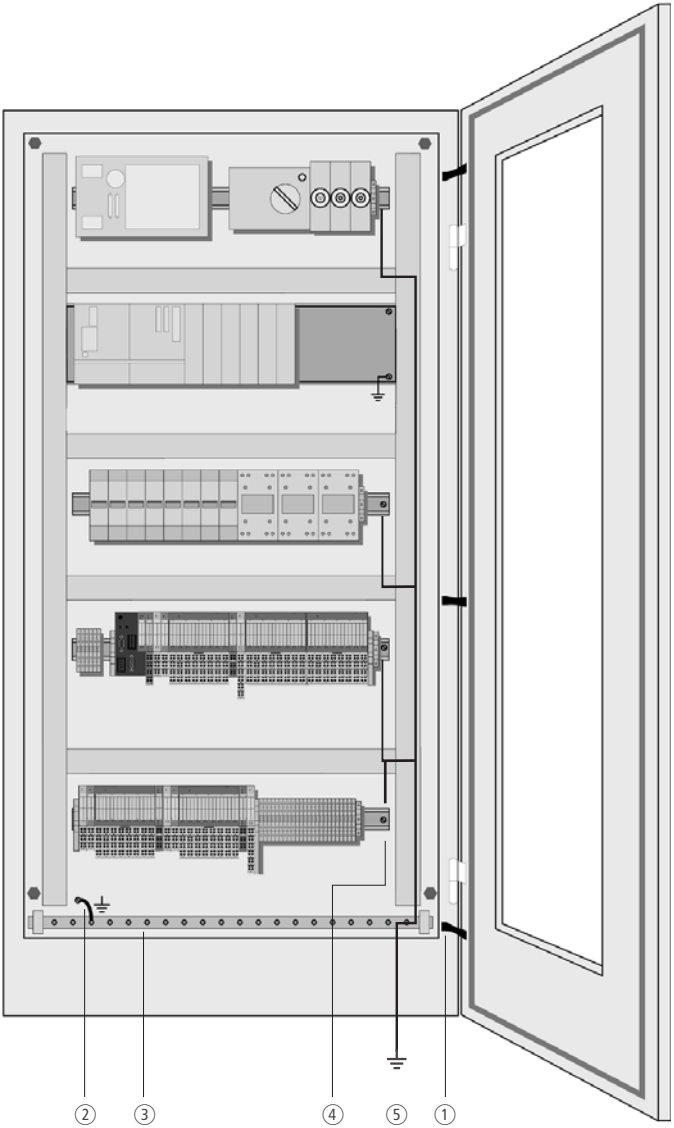

① Bonding straps

Bonding straps connect inactive metal components, if it is not possible to create a large surface area contact. Use short bonding straps with large surface areas.

② Mounting plates

Mounting plates used to hold control components must have a large surface area contact with the cabinet housing.

③ Protective conductor rail

The protective conductor rail must also be connected over a large surface area to the mounting plates and additionally with an external cable (cross-section at least 10 mm2 / 0,015 inch2) to the protective conductor system to avoid interference currents.

④ Protective conductor terminal block

The protective conductor terminal block must be connected to the protective conductor rail.

⑤ Protective conductor system cable (grounding point)

The cable must be connected over a large surface area with the protective conductor system.

Shielding of cables

Shielding is used to prevent interference from voltages and the radiation of interference fields by cables. Therefore, use only shielded cables with shielding braids made from good conducting materials (copper or aluminum) with a minimum degree of coverage of 80 %.

The cable shield should always be connected to both sides of the respective reference potential (if no exception is made, for example, such as high-resistant, symmetrical, analog signal cables). Only then can the cable shield attain the best results possible against electrical and magnetic fields.

A one-sided shield connection merely achieves an isolation against electrical fields.

Attention

When installing, please pay attention to the following...

the shield should be connected immediately when entering the system,
the shield connection to the shield rail should be of low impedance,
the stripped cable-ends are to be kept as short as possible,
the cable shield is not to be used as a bonding conductor.

If the data cable is connected via a SUB-D connector, the shielding should never be connected via pin 1, but to the mass collar of the plug-in connector.

The insulation of the shielded data-cable should be stripped and connected to the shield rail when the system is not in operation. The connection and securing of the shield should be made using metal shield clamps. The shield clamps must enclose the shielding braid and in so doing create a large surface contact area. The shield rail must have a low impedance (for example, fixing points of 10 to 20 cm apart) and be connected to a reference potential area. The cable shield should not be severed, but routed further within the system (for example, to the switchgear cabinet), right up to the interface connection.

Note

Should it not be possible to ground the shield on both sides due to switching arrangements or device specific reasons, then it is possible to route the second cable shield side to the local reference potential via a capacitor (short connection distances). If necessary, a varistor or resistor can be connected parallel to the capacitor, to prevent disruptive discharges when interference pulses occur.

A further possibility is a double-shielded cable (galvanically separated), whereby the innermost shield is connected on one side and the outermost shield is connected on both sides.

Potential Compensation

Potential differences can occur between installation components that are in separate areas and these

- are fed by different supplies,
- have double-sided conductor shields which are grounded on different installation components.

A potential-compensation cable must be routed to the potential compensation.

Warning

Never use the shield as a potential compensation.

Connection A				Connection B	
B	3	0 ----------0		3	B
	5	0	0	5	
A	8	0 ----------0		8	A

Figure 63: Potential compensation

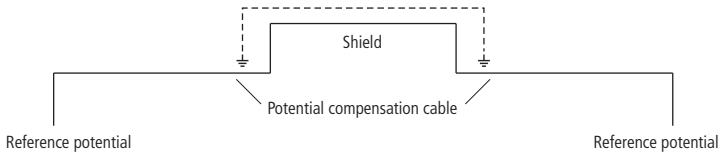

A potential compensation cable must have the following characteristics:

- Low impedance. In the case of compensation cables that are routed on both sides, the compensation line impedance must be considerably smaller than that of the shield connection (max. 10 % of shield connection impedance).
- Should the length of the compensation cable be less than 200 m, then its cross-section must be at least 16 mm2 / 0.025 inch2. If the cable length is greater than 200 m, then a cross-section of at least 25 mm2 / 0.039 inch2is required.
- The compensation cable must be made of copper or zinc coated steel.
- The compensation cable must be connected to the protective conductor over a large surface area and must be protected against corrosion.
- Compensation cables and data cables should be routed as close together as possible, meaning the enclosed area should be kept as small as possible.

Figure 64: Potential compensation between switchgear cabinets

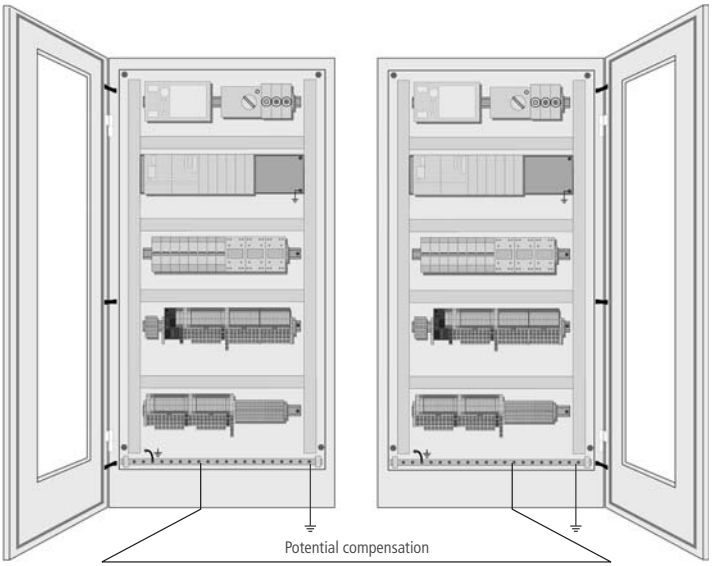

Switching Inductive Loads

In the case of inductive loads, a protective circuit on the load is recommended.

Protection against Electrostatic Discharge (ESD)

Attention

Electronics modules and base modules are at risk from electrostatic discharge when disassembled. Avoid touching the bus connections with bare fingers as this can lead to ESD damage.

Bus Connection

The bus connection of BL20 I/O modules is established via a 9-pole SUB-D connector according to RS 485 DIN 19 245 Part 1 or via direct wiring with a tension clamp terminal on the gateway. The assignment of the connections is described fully in chapter 2.

If the gateway is wired directly, the bus connection must be shielded. This can be done, for example, using the clamping yoke BL20-SCH-1.

Figure 65: Shield connection for PROFIBUS-DP

When connecting the gateway via a SUB-D male connector, the bus connection is shielded by using a metal bus data plug.

Attention

Where necessary, the bus termination must be made via a bus terminating resistor in a bus data plug (for example D9T451-4M).

Wiring

The graphic shows the minimum wiring with shielding between two bus stations using a SUB-D connector as an example.

Connection A				Connection B	
B	3	0 ----------0		3	B
	5	0	0	5	
A	8	0 ----------0		8	A

Figure 66: minimum wiring

Attention

The two signal wires must not be reversed!

Two-Pole Shield Connection

Shielded cables can be used for analog input and output signals. The connection between the shield and the respective base module can be made via a shield connection (BL20-ZBW2), which is available as an accessory.

Figure 67: Two-pole shield connection for analog modules

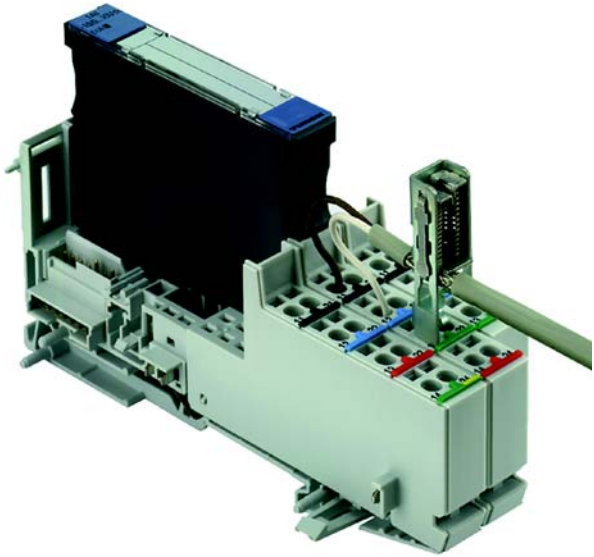

The shield connection is to be mounted in the corresponding connection level of the base module. The following cable diameters are permissible for the shield connection:

Diameter of the shielding braid:	max. 4.9 mm / 0.19 inch
Outer diameter of the cable:	max. 6.5 mm / 0.26 inch

7 Integration of Technology Modules in PROFIBUS-DP

Integration of the Counter Module BL20-1CNT-24VDC 2

Count mode: data image.....2
– Process output data 2
– Process input data 8
– Parameters for count mode 12
– Diagnostics for count mode 19
Measurement mode: data image 22
– Process output for measurement mode 22
– Process input for measurement mode 28
– Parameters for measurement mode 31
– Diagnostics for measurement mode 38
Guide to setting the High and Low words.....40
– Setting the lower and upper limit 40
Setting the lower and upper measuring limits.....45

Integration of the RS232 module BL20-1RS232 50

Data Image 50
– Process Input data (PDin) 50
– Process Output Data (PDout) 52

Integration of the RS485/422 module BL20-1RS485/422 55

Data Image 55
– Process Input data (PDin) 55
– Process Output Data (PDout) 57

Integration of the SSI module BL20-1SSI 60

Data image 60
– Process input data (PDin) 60
– Process output data (PDout) 67

Integration of the SWIRE Module BL20-E-1SWIRE 70

Data mapping under PROFIBUS-DP 70
– Process input 70
– Process output 72
– Diagnostics 74
– Parameter 82

Integration of the Counter Module BL20-1CNT-24VDC

Count mode: data image

Process output data

The process output data is the data that is output from the PLC via the gateway to the BL20-1CNT-24VDC module.

The BL20 module allows some parameters to be modified during operation.

The other parameters must be changed prior to commissioning.

Note

The current count operation is stopped if parameters are changed during operation.

Note

The parameters modified via the process output data are not retentive. The commissioning after a power failure is based on the parameter data of the configuration tool or default configuration.

The data is transferred in 8 byte format:

- The first 2 bytes are not yet assigned.
- Two control bytes contain the control functions for transferring the parameter values, for starting/stopping the measurement, for acknowledging errors and for resetting the status bit.
- Four bytes provide the parameter values for “Load direct“, “Load in preparation“, “Reference value 1“, “Reference value 2“ or “Behaviour of the digital outputs“.

Structure of the data bytes in PROFIBUS-DP with “Load value direct/in preparation“, “Reference value 1“ or “Reference value 2“.

Table 75: PDOut with “Load value direct/ in preparation“, “Reference value 1“ or “Reference value 2“

X = reserved

Bit	**7**	**6**	**5**	**4**	**3**	**2**	**1**	**0**
Byte								
0					X			
1					X			
2	X	X	X	LOAD_ DO_ PARAM	LOAD_ CMP_ VAL2	LOAD_ CMP_ VAL1	LOAD_ PREPARE	LOAD_ VAL
3	EXTF_ ACK	CTRL_ DO2	SET_ DO2	CTRL_ DO1	SET_ DO1	RES_ STS	CTRL_ SYN	SW_ GATE
4	Load value direct, Load value in preparation, Reference value 1 or Reference value 2							
5								
6								
7								

7

Structure of the data bytes in PROFIBUS-DP with “Function and behaviour of DO1/DO2“:

Table 76: PDOut with “Function and behaviour of DO1/DO2“

X = reserved

Bit	**7**	**6**	**5**	**4**	**3**	**2**	**1**	**0**
Byte								
0	X							
1	X							
2	X	X	X	LOAD_ DO_ PARAM	LOAD_ CMP_ VAL2	LOAD_ CMP_ VAL1	LOAD_ PREPARE	LOAD_ VAL
3	EXTF_ ACK	CTRL_ DO2	SET_ DO2	CTRL_ DO1	SET_ DO1	RES_ STS	CTRL_ SYN	SW_ GATE
4	X							
5	Pulse duration							
6	Hysteresis value							
7	X		MODE_DO2				MODE_DO1	

Table 77: Meaning of the data bits (process output)

A *Unlike the physical digital output DO1, output DO2 is only a data value that is indicated with the data bit STS_DO2 of the process input.*

Control bit	Explanations
MODE_DO2	Only valid if LOAD_DO_PARAM: “0“ →“1“. The virtual**A** output DO2 can show the status of the data bit SET_DO2 or comparison results if CTRL_DO2 = 1. MODE_DO2 defines which function DO2 is to accept: – 00: The output DO2 shows the status of the control bit SET_DO2. This must be released with CTRL_DO2 = 1. – 01:Output DO2 indicates: Counter status ≥ reference value 2 – 10:Output DO2 indicates: Counter status ≤reference value 2 – 11:Output DO2 indicates: Counter status = reference value 2 A pulse is generated for indicating equal values. The pulse duration is defined by byte 2 of this process output.s
MODE_DO1	Only valid if LOAD_DO_PARAM: “0“ →“1“. The physical output DO1 can show the status of the data bit SET_DO1 or comparison results if CTRL_DO1 = 1. MODE_DO1 defines which function DO1 is to accept: – 00: The output DO1 shows the status of the control bit SET_DO1. This must be released with CTRL_DO1 = 1. – 01:Output DO1 indicates: Counter status ≥ reference value 1 – 10:Output DO1 indicates: Counter status ≤reference value 1 – 11:Output DO1 indicates: Counter status = reference value 1 A pulse is generated for indicating equal values. The pulse duration is defined by byte 2 of this process output.

Control bit	Explanations
Hysteresis value	(0 to 255) The reference value 1/2 can be assigned a hysteresis value in order to generate a response at DO1/DO2 with hysteresis. This will prevent the excessive on and off switching of DO1/DO2 if the count value fluctuates too quickly around the reference value.
Pulse duration	(0 to 255) unit: ms If the DO1/DO2 outputs are set to indicate counter status = reference value 1/2, a longer pulse is sometimes required to indicate equal values.
EXTF_ ACK	Error acknowledgement The error bits must be acknowledged with the control bit EXTF_ACK after the cause of the fault has been rectified. This control bit must then be reset again. Any new error messages are not set while the EXTF_ACK control bit is set!
CTRL_ DO2	0: The virtual**A** output DO2 is blocked.
	1: The virtual**A** output DO2 is released.
SET_ DO2	If CTRL_DO2 = 1 and the virtual**A** output DO2 is set to indicate the value SET_DO2, DO2 can be set and reset directly with SET_DO2. DO2 can be set for this function via the process output (MODE_DO2 = 00 and LOAD_DO_PARAM “0“ →“1“). The output DO2 can also be set before commissioning via the separate parameter data. The default setting for DO2 is to indicate the status of SET_DO2.
CTRL_DO1	0: The output DO1 is blocked.
	1: The output DO1 is released.

Control bit	Explanations
SET_DO1	If CTRL_DO1 = 1 and the physical output DO1 is set to indicate the value SET_DO1, DO1 can be set and reset directly with SET_DO1. DO1 can be set for this function via the process output (MODE_DO1 = 00 and LOAD_DO_PARAM “0“ →“1“). The output DO2 can also be set before commissioning via the separate parameter data. The default setting for DO1 is to display the value of SET_DO1.
RES_STS	“0“ →“1“ Initiate resetting of status bits. Status bits STS_ND, STS_UFLW, STS_OFLW, STS_CMP2, STS_CMP1, STS_SYN (process input) are reset. Bit RES_STS_A = 1 (process input) acknowledges that the reset command has been received. RES_STS can now be reset to 0.
CTRL_SYN	Release synchronization 1: “0“ →“1“ (rising edge) at the physical DI input enables the counter value to be set (synchronized) once/periodically to the load value.
SW_GATE	“0“ →“1“: Counting is started (release). “1“ →“0“: Counting is stopped. The starting and stopping of the counting operation with a data bit is implemented with a so-called “SW gate”. The HW gate is also provided in addition for stopping and starting the counting operation via the DI hardware input. If this function is configured a positive signal must be present at this input in order to activate the SW gate (AND logic operation).
LOAD_ DO_PARAM	Parameter definition of the DO1 physical output and the virtual**A** DO2 output “0“ →“1“: DO1 and DO2 can indicate the status of data bit SET_DO1 and SET_DO2 or comparison results. The latest telegram (MODE_DO1 and MODE_DO2) indicates the function required for DO1 and DO2.

Control bit	Explanations
LOAD_ CMP_VAL2	Parameter definition of reference value 2 “0“ →“1“: The value in bytes 0 to 3 is accepted as a reference value 2.
LOAD_ CMP_VAL1	Parameter definition of reference value 1 “0“ →“1“: The value in bytes 0 to 3 is accepted as a reference value 1.
LOAD_ PREPARE	Parameter definition of Load counter in preparation “0“ →“1“: The value in bytes 0 to 3 is accepted as the new load value.
LOAD_VAL	Parameter definition of Load counter direct “0“ →“1“: The value in bytes 0 to 3 is accepted directly as the new count value.

Process input data

Process input data is data from the connected field device that is transmitted via the BL20-1CNT-24VDC module to the PLC. This is transferred in an 8-byte format as follows:

- 2 bytes contain status information.
- 1 byte contains the diagnostics data.
- 4 bytes are used to represent the counter value.

Structure of the data bytes in PROFIBUS-DP

Table 78: PDIn

X = reserved

Bit	**7**	**6**	**5**	**4**	**3**	**2**	**1**	**0**
Byte								
0	X							
1	STS_ND	STS_UFLW	STS_OFLW	STS_CMP2	STS_CMP1	x		STS_SYN
2 Status	STS_DN	STS_UP	X	STS_DO2	STS_DO1	X	STS_DI	STS_GATE
3 Diagn.	ERR_24Vdc	ERR_DO	ERR_PARA	X	X	RES_STS_A	ERR_LOAD	STS_LOAD
4	Count value							
5								
6								
7								

Table 79: Meaning of the data bits (process input)

Bits	**Explanations**
ERR_24Vdc	Short-circuit sensor supply This diagnostics information must be acknowledged with the EXTF_ACK (process output) control bit.
ERR_DO	Short-/open circuit/excess temperature at the output DO1 This diagnostics information must be acknowledged with the EXTF_ACK (process output) control bit.
ERR_PARA	– 1: There is a parameter error. ERR_PARA is a group diagnostics bit. With the separate diagnostics message bits 3 to 6 describe the parameter errors in more detail. – 0: The parameter definition is correct as per specification.

Bits	Explanations
RES_STS_A	– 1:Resetting of status bits running. The last process output telegram contained: RES_STS = 1. – 0: The last process output telegram contained: RES_STS = 0.
ERR_LOAD	– 1: Error with load function Control bits LOAD_DO_PARAM, LOAD_CMP_VAL2, LOAD_CMP_VAL1, LOAD_PREPARE and LOAD_VAL must not be set at the same time during the transfer. An incorrect value was transferred with the control bits. Example: Values above the upper count limit or below the lower count limit were selected for Load value direct or Load value in preparation.
STS_LOAD	Status of load function Set if the Load function is running.
STS_DN	1: Status direction down.
STS_UP	1: Status direction up.
STS_DO2	The DO2 status bit indicates the status of digital output DO2.
STS_DO1	The DO1 status bit indicates the status of digital output DO1.
STS_DI	The DI status bit indicates the status of digital input DI.
STS_GATE	1: Counting operation running.
STS_ND	Status zero crossing Set on crossing zero in counter range when counting without main direction. This bit must be reset by the RES_STS control bit.
STS_UFLW	Status lower count limit Set if the count value goes below the lower count limit. This bit must be reset by the RES_STS control bit.

Bits	Explanations
STS_OFLW	Status upper count limit Set if the counter goes above the upper count limit. This bit must be reset by the RES_STS control bit.
STS_CMP2	Status comparator 2 This status bit indicates a comparison result for comparator 2 if: – The output DO2 is released with CTRL_DO2 = 1. and – a comparison is run via MODE_DO2 = 01, 10 or 11. Otherwise STS_CMP2 simply indicates that the output is or was set. STS_CMP2 is also set if DO2 SET_DO2 = 1 when the output is not released. This bit must be reset by the RES_STS control bit.
STS_CMP1	Status comparator 1 This status bit indicates a comparison result for comparator 1 if: – The output DO1 is released with CTRL_DO1 = 1. and – a comparison is run via MODE_DO1 = 01, 10 or 11. Otherwise STS_CMP1 simply indicates that the output is or was set. It must be acknowledged with RES_STS (process output). The bit is reset immediately if acknowledgement takes place when the output is still set. STS_CMP1 is also set if DO1 SET_DO1 = 1 when the output is not released. This bit must be reset by the RES_STS control bit.
STS_SYN	Status synchronization After synchronization is successfully completed the STS_SYN status bit is set. This bit must be reset by the RES_STS control bit.

Parameters for count mode

Parameters consist of data that has to be sent to the module so that it can operate correctly in the application concerned.

Some parameters refer to the physical inputs/outputs A,B,DI,DO.

The parameters are stored in a non-volatile memory before being checked. The parameters that are not mode-dependent are evaluated and processed first of all. If some of the mode-dependent parameters have an error, the appropriate diagnostics message is initiated and the bits in the check-back interface/process input are set.

(X = reserved)

	B7	B6	B5	B4	B3	B2	B1	B0
Byte 0 (15/16)	X	X	counter mode					
Byte 1 (14/15)	X	main count direction		synchro-nization	function DI		digital input DI	gate function
Byte 2 (13/14) to Byte 5 (10/11)	lower count limit							
Byte 6 (9/10) to Byte 9 (6/7)	upper count limit							
Byte 10 (5/6)	hysteresis							
Byte 11 (4/5)	pulse duration							
Byte 12 (3/4)	function DO2			function DO1			diag-nostic DO1	substitute value DO1
Byte 13 (2/3)	direction input (B)	sensor (A)		sensor/ input filter (DI)	sensor/ input filter (B)	sensor/ input filter (A)	signal evaluation (A,B)	
Byte 14 (1/2)	X	X	behavior CPU/ master stop		X	X	X	group diag-nostics
Byte 15 (0/1)	X	X	X	X	X	X	X	X

The list parameters are set by means of a fieldbus configuration tool or the I/Oassistant software package. Some parameters cannot be modified online. These parameters must be defined before commissioning. Some parameters can also be modified via the process output after commissioning →„Process output data".

Note

The current count operation is stopped if parameters are changed during operation.

Table 80: Parameters for count modes

A *Default value*

Designation		**Description**
Value		
– Group diagnostics		
0 **A**	Release **A**	Separate diagnostics is released.
1	Block	Separate diagnostics is blocked.
– Behavior CPU/master stop		
00 **A**	turn off DO1 **A**	A failure of the higher-level PLC causes output DO1 to be switched off or held.
01	Proceed with operating mode	A failure of the higher-level PLC causes the module to continue operating without restriction.
10	DO1 switch substitute value	A failure of the higher-level PLC causes output DO1 to assume the value specified at Substitute value DO1.
11	DO1 hold last value	A failure of the higher-level PLC causes output DO1 to retain the status in the event of a failure

A *Default value*

Designation		Description
Value		
– Signal evaluation (A,B)		
00 **A**	Pulse and direction **A**	In this mode input B can control up and down counting.
01	rotary sensor: single	
10	rotary sensor: double	
11	rotary sensor: four-fold	
– Sensor/Input filter (A)		An input filter at inputs A,B and DI can suppress high-frequency interference and thus increase the accuracy of the counting. The limit frequency can be adapted to the application: 20 kHz or 200 kHz
0 **A** 1	2.5µs (200 kHz) **A** 25µs (20 kHz)	
– Sensor/Input filter (B)		
0 **A** 1	2.5µs (200 kHz) **A** 25µs (20 kHz)	
– Sensor/Input filter (DI)		
0 **A** 1	2.5µs (200 kHz) **A** 25µs (20 kHz)	
– sensor (A)		
00 **A** 01	Normal Inverted	
– direction input (B)		
0 **A** 1	Normal Inverted	

A *Default value*

Designation		Description
Value		
– function DO1		
00 **A**	Output	
01	On when cnt. value ≧ ref. value	
10	On when cnt. value ≦ ref. value	
11	Pulse when cnt. value = ref. value	
– function DO2		
00 **A**	Output	
01	On when cnt. value ≧ ref. value	
10	On when cnt. value ≦ ref. value	
11	Pulse when cnt. value = ref. value	
– substitute value DO1		
0 **A** 1	0 1	This value determines the state of output DO1 in the event of a failure if: behavior CPU/master stop = 10

A *Default value*

Designation		Description
Value		
– diagnostic DO1		
0 **A**	On	The Short-/open circuit DO diagnostic message is not blocked.
1	Off	The Short-/open circuit DO diagnostic message is blocked.
– hysteresis		
0 **A** to 255	0 to 255 (UINT)	
*– Pulse duration DO1, DO2 [n*2ms]*		
0 **A** to 255	0 to 255 (UINT)	
– count mode		
000000 **A**	continuous count	
000001	single-action count	
000010	periodical count	
000011 to 011111		Reserve

A *Default value*

Designation		Description
Value		
– gate function		
0 **A**	abort count procedure	If the counting operation is aborted, counting begins from the load value on restart.
1	interrupt count procedure	If the counting operation is interrupted, the counter continues on restart from the actual counter value.
– digital input DI		
0 **A** 1	Normal Inverted	
– function DI		
00 **A**	Input	
01	HW gate	Hardware release
10	latch retrigger function when edge pos.	
11	synchronization when edge pos.	
– Synchronization		
0 **A** 1	single-action periodical	

B *In some PLCs the count limits (one double word each) consist of a High Word (HWORD) and Low Word (LWORD). The relevant ranges are stated.*

Designation		Description
Value		
– main count direction		
00 **A** 01 10	None Up Down	
– lower count limit (HWORD) **B**		
8000 0000 **A** to 0 ($_{hex}$)	-32 7681 to 0 (SUINT)	If the upper or lower count limit is reached, the count value jumps to the load value, the lower count limit or the upper count limit, depending on the count mode and the main count direction.
– lower count limit (LWORD) **B**		
8000 0000 **A** to 0 ($_{hex}$)	-32 768 to 32 767 (SINT) (0)	see above: „lower count limit“
– upper count limit (HWORD) **B**		
0 to 7FFF FFFF **A** ($_{hex}$)	0 to 32 767 (SINT)	see above: „lower count limit“
– upper count limit (LWORD) **B**		
0 to 7FFF FFFF **A** ($_{hex}$)	0 to 655 351 (SINT)	see above: „lower count limit“

Diagnostics for count mode

The parameter setting for the PROFIBUS-DP gateway provides the Gateway Diagnostics parameter for selecting between two different diagnostics displays. Choose “Devices, ID, Channel Diagnostics” to select more detailed diagnostics indication. The diagnostics message will then consist of the following elements:

- 2 bytes of gateway diagnostics (device-related diagnostics)
- 64 bits of ID-specific diagnostics
- n x 3 bytes of channel-specific diagnostics (n: number of channels with active diagnostics)

With channel-specific diagnostics, the use of an error number enables the type of error to be indicated in plain text (e.g. Parameter error).

When Device-related Diagnostics is selected, an abbreviated diagnostics message is generated that simply shows the gateway diagnostics (device-related diagnostics). The diagnostics bytes of all station modules are attached that support diagnostics.

Note that the Measurement mode diagnostics is only set in conjunction with another diagnostics bit.

Table 81: Meaning and position of the data bits (diagnostics)

Name of error type	Position	Explanations
short-/open circuit ERR_DO	0	Short-/open circuit/excess temperature at output DO1. This diagnostics information must be acknowledged with the EXTF_ACK (process output) control bit.
short-circuit sensor pwr supply	1	Short-circuit of sensor supply. This diagnostics information must be acknowledged with the EXTF_ACK control bit.
end of counter range wrong	2	The following parameter errors are indicated: Upper count limit = lower count limit Upper count limit ≦ lower count limit Upper count limit < 0 The numerical values are displayed as two's complement values. The permissible range for the upper count limit is therefore: $0_{hex....}$7FFF FFFD$_{hex}$; 7FFF FFFE$_{hex}$; 7FFF FFFF$_{hex}$ The decimal value range for this SINT value is: 0...2147483645; 2147483646; 2147483647
start of counter range wrong	3	The following parameter errors are indicated: Lower count limit = upper count limit Lower count limit ≧ upper count limit Lower count limit > 0 The numerical values are displayed as two's complement values. The permissible range for the lower count limit is therefore: 8000 0000$_{hex}$...FFFF FFFE$_{hex}$; FFFF FFFF$_{hex}$; 0_{hex} The decimal value range for this SINT value is: -2147483648...-2,-1.0

Name of error type	Position	Explanations
invert-DI+latch-retr. not perm.	4	Inverting the digital input signal with the Latch Retrigger function is not permissible.
main count direction wrong	5	The value (11) for selecting the main count direction is incorrect. Permissible values: 00 →None 01 →Up 10 →Down
operating mode wrong	6	The value (XXXX11) for selecting the operating mode is incorrect. Permissible values for count mode: 000000Continuous count 000001Single-action count 000010Periodical count Permissible values for measurement mode: 100000 →Frequency measurement 100001 →Revolutions measurement 100010 →Period duration measurement
measurement mode	7	This message is always shown in conjunction with other diagnostics messages and indicates that measurement mode is active. This message never occurs in count mode.

Note

Counting should not be started if there is a parameter error (diagnostics bits 2 to 6)!

Measurement mode: data image

Process output for measurement mode

The process output data is the data that is output from the PLC via the gateway to the BL20-1CNT-24VDC module.

The BL20-1CNT-24VDC module allows some parameters to be modified during operation.

The other parameters must be changed prior to commissioning.

Note

The current count operation is stopped if parameters are changed during the measuring operation.

Note

The parameters modified via the process output data are not retentive. The commissioning after a power failure is based on the parameter data of the configuration tool or default configuration.

The data is transferred in 8 byte format:

- The first 2 bytes are not yet assigned.
- Two control bytes contain the control functions for transferring the parameter values, for starting/stopping the measurement, for acknowledging errors and for resetting the status bit.
- Four bytes represent the parameter values for Lower limit or Upper limit, Function of DO1 or Integration time.

Structure of the data bytes in PROFIBUS-DP with „Function of DO1“ set:

Table 82: Structure of the data bytes with „Function of DO1“ set

X = reserved

Bit	**7**	**6**	**5**	**4**	**3**	**2**	**1**	**0**
Byte								
0	X							
1	X							
2	X	X	X	LOAD_ DO_ PARAM	X	LOAD_ INTTIME	LOAD_ UPLIMIT	LOAD_ LOLIMIT
3	EXTF_ ACK	X	X	CTRL_ DO1	SET_ DO1	RES_ STS	X	SW_ GATE
4	X							
5	X							
6	X							
7	X						MODE_DO1	

7

Structure of the data bytes in PROFIBUS-DP with „Lower limit“ or „Upper limit“ set:

Table 83: Structure of the data bytes with „Lower limit“ or „Upper limit“ set

X = reserved

Bit	**7**	**6**	**5**	**4**	**3**	**2**	**1**	**0**
Byte								
0					X			
1					X			
2	X	X	X	LOAD_ DO_ PARAM	X	LOAD_ INTTIME	LOAD_ UPLIMIT	LOAD_ LOLIMIT
3	EXTF_ ACK	X	X	CTRL_ DO1	SET_ DO1	RES_ STS	X	SW_ GATE
4	Lower limit or upper limit							
5								
6								
7								

Structure of the data bytes in PROFIBUS-DP with „Integration time set“:

Table 84: Structure of the data bytes with „Integration time set“

X = reserved

Bit	**7**	**6**	**5**	**4**	**3**	**2**	**1**	**0**
Byte								
0	X							
1	X							
2	X	X	X	LOAD_ DO_ PARAM	X	LOAD_ INTTIME	LOAD_ UPLIMIT	LOAD_ LOLIMIT
3	EXTF_ ACK	X	X	CTRL_ DO1	SET_ DO1	RES_ STS	X	SW_ GATE
4	X							
5	X							
6	Integration time							
7								

Table 85: Meaning of the data bits (process output)

A

Control bit	**Explanations**
EXTF_ ACK	Error acknowledgement The ERR_DO or ERR_24Vdc error bits must be acknowledged with the control bit EXTF_ACK after the cause of the fault has been rectified. This control bit must then be reset again. Any new error messages are not set while the EXTF_ACK control bit is set!
CTRL_DO1	– 0: The output DO1 is blocked. – 1: The output DO1 is released.

Control bit	Explanations
SET_DO1	If CTRL_DO1 = 1 and the physical output DO1 is configured for indicating the value SET_DO1, DO1 can be set and reset directly with SET_DO1. DO1 can be set for this function via the process output (MODE_DO1 = 00 and LOAD_DO_PARAM 0 →1). The output DO1 can also be set before commissioning via the separate parameter data. The default setting for DO1 is to display the value of SET_DO1.
RES_STS	0 →1 Initiate resetting of status bits. The STS_UFLW, STS_OFLW and STS_CMP1 (process input) status bits are reset. Bit RES_STS_A = 1 (process input) acknowledges that the reset command has been received. RES_STS can now be reset to 0.
SW_GATE	0 →1: Measuring is started (software release). 1 →0: Measuring is stopped.
LOAD_DO_ PARAM	Parameter setting of the physical output DO1 0 →1: DO1 can indicate the status of different data bits as a signal. The current telegram (byte 0) determines the data bits to which DO1 is to refer.
LOAD_ INTTIME	Parameter setting of the Integration time 0 →1: Bytes 0 to 1 of this process output represent a factor for forming the Integration time for frequency measurement and for determining the rotational speed. The integration time can be adjusted between 10 ms and 10 s in 10 ms increments and is produced by multiplying the factor x 10 ms. With period duration measurement, this factor determines the number of periods measured in order to calculate a mean value. A factor 1 to 1000 (1hex to 3E8hex) is permissible.
LOAD_ UPLIMIT	Parameter setting of the upper measuring limit 0 →1: The value in bytes 0 to 3 is accepted directly as the new upper measuring limit. LOAD_UPLIMT: 1 to 200 000 000 x 10-3 Hz 1 to 25 000 000 x 10-3 rpm 1 to 100 000 000 ms

Control bit	Explanations
LOAD_ LOPLIMIT	Parameter setting of the lower measuring limit 0 A 1: The value in bytes 0 to 3 is accepted directly as the new lower measuring limit. LOAD_LOLIMIT: 0 to 199 999 999 x10-3 Hz 0 to 24 999 999 x 10-3 rpm 0 to 99 999 999 ms
MODE_DO1	MODE_DO1 is only valid if LOAD_DO_PARAM: 0 →1. The physical output DO1 can show the status of the data bit SET_DO1 or comparison results if CTRL_DO1 = 1. MODE_DO1 defines which function DO1 is to accept: – **00**: The output DO1 indicates the status of the control bit SET_DO1. – **01**: The output DO1 indicates a measurement outside of the limits, i.e. above the upper measuring limit or below the lower measuring limit. STS_OFLW = 1 or STS_UFLW = 1 (process input). – **10**: Output DO1 indicates a value below the lower measuring limit. STS_UFLW = 1 (process input) – **11**:Output DO1 indicates a value above the upper measuring limit. STS_OFLW = 1 (process input)

Process input for measurement mode

Process input data is data from the connected field device that is transmitted via the XN-1CNT-24VDC module to the PLC. This is transferred in an 8-byte format as follows:

- 2 bytes contain status information.
- 1 byte contains the diagnostics data.
- Four bytes are used to contain the measured values.

Structure of the data bytes in PROFIBUS-DP

Table 86: PDIn

X = reserved

Bit	**7**	**6**	**5**	**4**	**3**	**2**	**1**	**0**
Byte								
7	X							
6	X	STS_ UFLW	STS_ OFLW	X	STS_ CMP1	x		X
5 Status	STS_ DN	STS_ UP	X	X	STS_ DO1	X	STS_ DI	STS_ GATE
4 Diagn.	ERR_ 24Vdc	ERR_ DO	ERR_ PARA	X	X	RES_ STS_A	ERR_ LOAD	STS_ LOAD
3	measured value							
2								
1								
0								

Table 87: Meaning of the data bits (process input)

Bits	Explanations
ERR_24Vdc	Short-circuit sensor supply This diagnostics information must be acknowledged with the EXTF_ACK (process output) control bit.
ERR_DO	Short-/open circuit/excess temperature at the output DO1
ERR_PARA	– 1: There is a parameter error. ERR_PARA is a group diagnostics bit. With the separate diagnostics message bits 3 to 6 describe the parameter errors in more detail. – 0: The parameter definition is correct as per specification.
Bits	**Explanations**
RES_STS_A	– 1:Resetting of status bits running. The last process output telegram contained: RES_STS = 1. – 0: The last process output telegram contained: RES_STS = 0.
ERR_LOAD	1: Error with load function The control bits LOAD_UPLIMIT and LOAD_LOLIMIT must not be set simultaneously during the transfer. The value of LOAD_UPLIMT and LOAD_LOLIMIT was selected outside of the permissible range. Permissible values for LOAD_LOLIMIT: 0 to 199 999 999 x10-3 Hz 0 to 24 999 999 x 10-3 rpm 0 to 99 999 999 ms Permissible values for LOAD_UPLIMIT: 1 to 200 000 000 x 10-3 Hz 1 to 25 000 000 x 10-3 rpm 1 to 100 000 000 ms
STS_LOAD	Status of load function Set if the Load function is running.
STS_DN	Direction status : down. The direction is determined by a signal at the physical input B. The Signal evaluation parameter (A, B): must be set to pulse and direction.

Bits	Explanations
STS_UP	Direction status: up. The direction is determined by a signal at the physical input B. The Signal evaluation parameter (A, B): must be set to pulse and direction.
STS_DO1	The DO1 status bit indicates the status of digital output DO1.
STS_DI	The DI status bit indicates the status of digital input DI.
STS_GATE	1: Measuring operation running.
STS_UFLW	1: The lower measuring limit was undershot. The bit must be reset with RES_STS: 0 →1.
STS_OFLW	1: The upper measuring limit was exceeded. The bit must be reset with RES_STS: 0 →1.
STS_CMP1	1: Measuring terminated The measured value is updated with every elapsed time interval. The end of a measurement (expiry of the time interval) is indicated with the status bit STS_CMP1. The bit must be reset with RES_STS: 0 →1.

Parameters for measurement mode

Parameters consist of data that has to be sent to the module so that it can operate correctly in the application concerned.

Some parameters refer to the physical inputs/outputs A, B, DI, DO.

The parameters are stored in a non-volatile memory before being checked. The parameters that are not mode-dependent are evaluated and processed first of all. If some of the mode-dependent parameters have an error, the appropriate diagnostic message is initiated and the bits in the check-back interface/process input are set. (X = reserved)

	B7	B6	B5	B4	B3	B2	B1	B0
Byte 0 (15/16)	X	X	measurement mode					
Byte 1 (14/15)	X	X	X	X	function DI		digital input DI	X
Byte 2 (13/14)	lower limit (LWORD)							
Byte 5 (12/13)								
Byte 4 (11/12)	lower limit (HWORD)							
Byte 5 (10/11)	upper limit (LWORD)							
Byte 6 (9/10)								
Byte 7 (8/9)	upper limit (HWORD)							
Byte 8 (7/8)	integration time [n*10ms]							
Byte 9 (6/7)								
Byte 10 (5/6)	sensor pulses per revolution							
Byte 11 (4/5)								

	B7	B6	B5	B4	B3	B2	B1	B0
Byte 12 (3/4)	X	X	X	function DO1			diag-nostic DO1	substitute value DO1
Byte 13 (2/3)	direction input (B)	sensor (A)		sensor/ input filter (DI)	sensor/ input filter (B)	sensor/ input filter (A)	signal evaluation (A,B)	
Byte 14 (1/2)	X	X	behavior CPU/ master STOP		X	X	X	Group diag-nostics
Byte 15 (0/1)	X	X	X	X	X	X	X	X

Table 88: Parameters for measurement modes

A *Default value*

Designation		Description
Value		
– measurement mode		
100000 **A**	frequency measurement	The module counts the pulses received within a specified integration time.
100001	revolutions measurement	In this operating mode, the counter module counts the pulses received from a rotary sensor within a predefined integration time.
100010	period duration measurement	In this operating mode the counter module measures the precise time between two rising edges of the counter signal in ms by counting the pulses of an exact internal quartz crystal reference frequency (1 MHz).
100011 to 111111	reserved	-
– digital input DI		
0 **A** 1	Normal Inverted	
– function DI		
00 **A**	Input	
01	HW gate	Hardware release
10 to 11	reserved	-

A *Default value*
B *In some PLCs the count limits (one double word each) consist of a High Word (HWORD) and Low Word (LWORD). The relevant ranges are stated.*
C

Designation		**Description**
Value		
– lower limit (HWORD) **B**		Lower limit for – 0 to f_{max}-1 – 0 to n_{max}-1 – 0 to t_{max}-1
0 **A**	0 to 255 (SINT)	
– lower limit (LWORD) **B**		
0 **A**	0 to 65 535 (SINT)	
– upper limit (HWORD) **B**		Upper limit for – 1 to f_{max} – 1 to n_{max} – 1 to t_{max}
255 **A**	*0 to 255*	
– upper limit (LWORD) **B**		
65 535 **A**	0 to 65 535	
*– integration time [n*10 ms]:“* **or** *number of periods*		
10 **A**	1 to 1000	Factor for forming an integration time (frequency measurement) and number of measured periods for determining an average period duration.
– sensor pulses per revolution		
1 **A**	1 to 65 535 (SINT)	This parameter is used to determine the rotational speed.
– substitute value DO1		
0 **A** 1	0 1	This value determines the state of output DO1 in the event of a failure if: behavior CPU/Master STOP = 10

A *Default value*

Designation		Description
Value		
– diagnostic DO1		
0 **A**	On	The Short-/open circuit DO diagnostics message is not blocked.
1	Off	The Short-/open circuit DO diagnostics message is blocked.
– function DO1		
00 **A**	Output	Behaviour of the digital outputs DO1/DO2.
01	outside of limits	
10	below lower limit	
11	above upper limit	
– signal evaluation (A,B)		
00 **A**	Pulse and direction	In this mode input B can receive a signal for the rotational direction. The process entry/check-back interface returns the status rotation direction via STS_DN and STS_UP.
01	rotary sensor: single	The evaluation options can be set in the BL20 counter module configuration. The following settings are possible: – Single – Double – Fourfold
10 to 11	reserved	-

– Sensor/Input filter (A)		An input filter at inputs A,B and DI can suppress high-frequency interference and thus increase the accuracy of the counting. The limit frequency can be adapted to the application: 20 kHz or 200 kHz
0 **A**	2.5µs (200 kHz) **A**	
1	25µs (20 kHz)	
– Sensor/Input filter (B)		
0 **A**	2.5µs (200 kHz) **A**	
1	25µs (20 kHz)	
– Sensor/Input filter (DI)		
0 **A**	2.5µs (200 kHz) **A**	
1	25µs (20 kHz)	
– sensor (A)		
00 **A**	Normal	
01	Inverted	
– direction input (B)		
0 **A**	Normal	
1	Inverted	
– Group diagnostics		
0 **A**	Release **A**	Separate diagnostics is released.
1	Block	Separate diagnostics is blocked.

Designation		Description
– Behavior CPU/master stop		
00 **A**	turn off DO1 **A**	A failure of the higher-level PLC causes output DO1 to be switched off or held.
01	Proceed with operating mode	A failure of the higher-level PLC causes the module to continue operating without restriction.
10	DO1 switch substitute value	A failure of the higher-level PLC causes output DO1 to assume the value specified at Substitute value DO1.
11	DO1 hold last value	A failure of the higher-level PLC causes output DO1 to retain the status in the event of a failure

Diagnostics for measurement mode

The parameter setting for the PROFIBUS-DP gateway provides the Gateway Diagnostics parameter for selecting between two different diagnostics displays. Choose “Devices, ID, Channel Diagnostics” to select more detailed diagnostics indication. The diagnostics message will then consist of the following elements:

- Two bytes of gateway diagnostics (device-related diagnostics)
- 64 bits of ID-specific diagnostics
- n x 3 bytes of channel-specific diagnostics (n: number of channels with active diagnostics)

With channel-specific diagnostics, the use of an error number enables the type of error to be indicated in plain text (e.g. Parameter error).

When Device-related Diagnostics is selected, an abbreviated diagnostics message is generated that simply shows the gateway diagnostics (device-related diagnostics). The diagnostics bytes of all station modules are attached that support diagnostics.

The Measurement mode diagnostic should only be set together with another diagnostics bit.

Table 89: Meaning and position of the data bits (diagnostics)

Name of error type	Position	Explanation
short-/open circuit ERR_DO	0	Short-/open circuit/excess temperature at the output DO1 This diagnostics information must be acknowledged with the EXTF_ACK control bit.
short-circuit sensor pwr supply	1	Short-circuit of sensor supply This diagnostics information must be acknowledged with the EXTF_ACK control bit.
sensor pulse wrong	2	This error signal refers to the parameter value Sensor pulses per revolution. The latest configuration tools prevent an incorrect value from being entered.

Name of error type	Position	Explanation
integration time wrong	3	The value for the integration time is incorrect. The permissible value range is: 1 to 1000 This enables permissible integration times (frequency measurement/revolutions measurement) from 10 ms to 10 000 ms in 10 ms increments and for period duration measurement averaging over 1 to 1000 periods.
upper limit wrong	4	The value for the upper limit is incorrect. Permissible value range: 1 to 16777215
lower limit wrong	5	The value for the lower limit is incorrect. Permissible value range: 0 to 16777214
operating mode wrong	6	The value (XXXX11) for selecting the operating mode is incorrect. Permissible values for count mode: 000000 →Continuous count 000001 →Single-action count 000010 →Periodical count Permissible values for measurement mode: 100000 →Frequency measurement 100001 →Revolutions measurement 100010 →Period duration measurement
measurement mode	7	This message is always shown in conjunction with other diagnostics messages and indicates that messages refer to an active measurement mode.

Guide to setting the High and Low words

Setting the lower and upper limit

The **lower count limit** is divided as follows
(range: -2 147 483 648 (-231) to 0) in a High and a Low word:

Convert your decimal count limit to hexadecimal format.

- Example:
- The lower count limit is to be -123 456. This decimal value is represented in hexadecimal format (double word) as FFFE 1DC0.
- The hexadecimal value (double word) is divided into a High word (FFFE) and a Low word (1DC0). Both these values must be converted from hexadecimal to decimal values as many controllers only accept decimal values for setting parameters.
- Due to the fact that many tools and PCs can only process hexadecimal values in unsigned format during the conversion from hexadecimal to decimal values (i.e. bit 15 is not interpreted as a sign bit but as a value), negative values (bit 15 = 1) must be converted manually.
- The following applies to the Low word:
  If bit 15 is not set, the Low word is converted to the corresponding positive decimal value.
- In the example:
  Low word (hexadecimal): 1DC0

Low word (binary): 0001 111 1100 0000

Bit 0:	2^0	=	1	x	0	=	0
Bit 1:	2^1	=	2	x	0	=	0
Bit 2:	2^2	=	4	x	0	=	0
Bit 3:	2^3	=	8	x	0	=	0
Bit 4:	2^4	=	16	x	0	=	0
Bit 5:	2^5	=	32	x	0	=	0
Bit 6:	2^6	=	64	x	1	=	64
Bit 7:	2^7	=	128	x	1	=	128
Bit 8:	2^8	=	256	x	1	=	256
Bit 9:	2^9	=	512	x	0	=	0
Bit 10:	2^{10}	=	1024	x	1	=	1024
Bit 11:	2^{11}	=	2048	x	1	=	2048
Bit 12:	2^{12}	=	4096	x	1	=	4096
Bit 13:	2^{13}	=	8192	x	0	=	0
Bit 14:	2^{14}	=	16384	x	0	=	0
Bit 15:	2^{15}	=	32768	x	0	=	0

Low word (decimal): 7 616

- If bit 15 is set, the reciprocal value is formed. This procedure is described in the following for the High word.
- The same principle applies to the High word:
- If bit 15 is not set, the High word is converted to the correpon-ding positive decimal value.

- If bit 15 is set, the reciprocal value of the hexadecimal value is formed:

  The high word (hex) is subtracted from the hexadecimal value FFFF. 1 is added to the result.

  Example:
  FFFF - FFFE = 0001
  0001 + 1 = 0002
  This value is converted to the corresponding decimal value:

  In the example:
  0002 is converted to 2
  The result will be negative, as bit 15 is set in the High word (hex) (FFFE in signed format).
- You receive as a decimal value for FFFE: -2
- In the example:
  High word (hexadecimal): FFFE
  High word (binary): 1111 1111 1111 1110
  High word (decimal): -2
- The calculated values are entered in the appropriate entry lines of the parameter mask for the BL20 counter module (count mode).

Figure 68: Entering the lower count limit as a High and Low word (dez.)

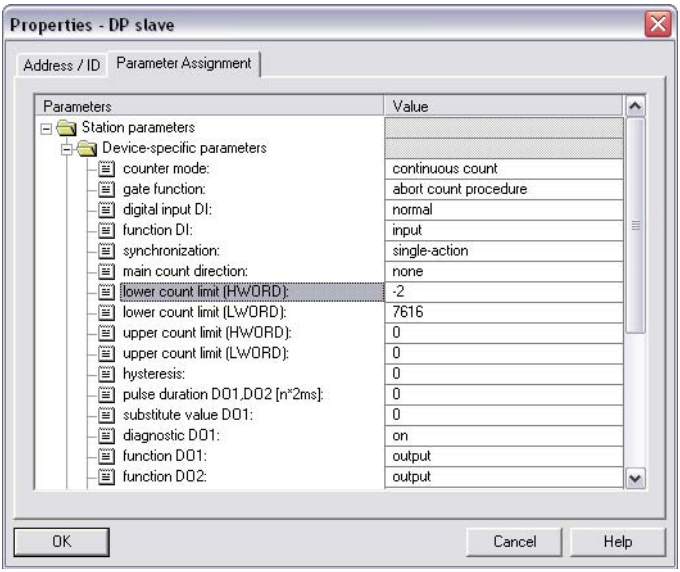

The **upper count limit** is divided as follows
(range: 0 to +2 147 483 647 (231-1)) in a High and a Low word:

- Convert your decimal count limit to hexadecimal format. The upper count limit is always a positive value.
- Example:
  The upper count limit is to be 12 345 678. This decimal value is represented in hexadecimal format (double word) as 00BC 614E.
- The hexadecimal value (double word) is divided into a High word (00BC) and a Low word (614E).
- The Low value is converted to a decimal value:
- In the example:
  Low word (hexadecimal): 614E

Low word (binary): 0110 0001 0100 1110

Bit 0:	2^0	=	1	x	0	=	0
Bit 1:	2^1	=	2	x	1	=	2
Bit 2:	2^2	=	4	x	1	=	4
Bit 3:	2^3	=	8	x	1	=	8
Bit 4:	2^4	=	16	x	0	=	0
Bit 5:	2^5	=	32	x	0	=	0
Bit 6:	2^6	=	64	x	1	=	64
Bit 7:	2^7	=	128	x	0	=	0
Bit 8:	2^8	=	256	x	1	=	256
Bit 9:	2^9	=	512	x	0	=	0
Bit 10:	2^{10}	=	1024	x	0	=	0
Bit 11:	2^{11}	=	2048	x	0	=	0
Bit 12:	2^{12}	=	4096	x	0	=	0
Bit 13:	2^{13}	=	8192	x	1	=	8192
Bit 14:	2^{14}	=	16384	x	1	=	16384
Bit 15:	2^{15}	=	32768	x	0	=	0

Low word (decimal): 24 910

- The same principle applies to the High word:
- In the example:
  High word (hexadecimal): 00BC
  High word (binary): 0000 0000 1011 1100
  High word (decimal): 188
- The calculated values are entered in the appropriate entry lines of the parameter mask for the BL20 counter module (count mode).

Figure 69: Entering the upper count limit as a High and Low word (dez.)

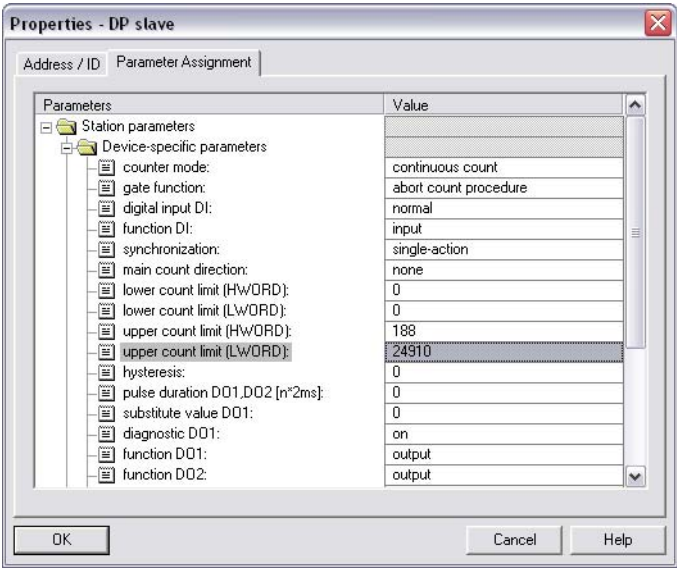

Setting the lower and upper measuring limits

The lower measuring limit is divided as follows into a High and a Low word:

- Convert your decimal measuring limit to hexadecimal format.
- Example:
  The lower measuring limit is to be 654 321. This decimal value is represented in hexadecimal format (double word) as 0009 FBF1.
- The hexadecimal value (double word) is divided into a High word (0009) and a Low word (FBF1).
- The Low value is converted to a decimal value:
- In the example:
  Low word (hexadecimal): FBF1

Low wOrd (binary): 1111 1011 1111 0001

Bit 0:	2^0	=	1	x	1	=	1
Bit 1:	2^1	=	2	x	0	=	0
Bit 2:	2^2	=	4	x	0	=	0
Bit 3:	2^3	=	8	x	0	=	0
Bit 4:	2^4	=	16	x	1	=	16
Bit 5:	2^5	=	32	x	1	=	32
Bit 6:	2^6	=	64	x	1	=	64
Bit 7:	2^7	=	128	x	1	=	128
Bit 8:	2^8	=	256	x	1	=	256
Bit 9:	2^9	=	512	x	1	=	512
Bit 10:	2^{10}	=	1024	x	0	=	0
Bit 11:	2^{11}	=	2048	x	1	=	2048
Bit 12:	2^{12}	=	4096	x	1	=	4096
Bit 13:	2^{13}	=	8192	x	1	=	8192
Bit 14:	2^{14}	=	16384	x	1	=	16384
Bit 15:	2^{15}	=	32768	x	1	=	32768

Low word (decimal): 64 497

- The same principle applies to the High word:
- In the example:
  High word (hexadecimal): 0009
  High word (binary): 0000 0000 0000 1001
  High word (decimal): 9
- The calculated values are entered in the appropriate entry lines of the parameter mask for the BL20 counter module (measurement mode).

Figure 70: Entering the lower measuring limit as a High and Low word (dez.)

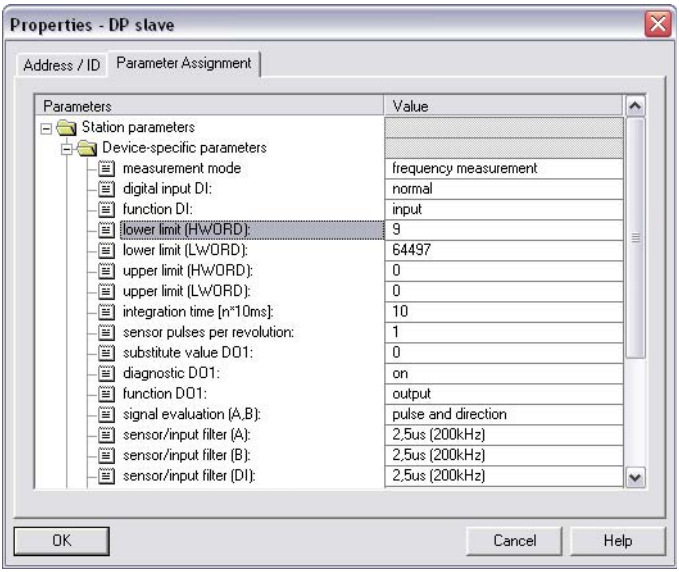

The **upper measuring limit** is divided as follows into a High and a Low word:

- Convert your decimal measuring limit to hexadecimal format.
- Example:
  The upper measuring limit is to be 782 955. This decimal value is represented in hexadecimal format (double word) as 000B F26B.
- The hexadecimal value (double word) is divided into a High word (000B) and a Low word (F26B).
- The Low value is converted to a decimal value:
- In the example:
  Low word (hexadecimal): F26B
  Low word (binary): 1111 0010 0110 1011

Bit 0:	2^0	=	1	x	1	=	1
Bit 1:	2^1	=	2	x	1	=	2
Bit 2:	2^2	=	4	x	0	=	0
Bit 3:	2^3	=	8	x	1	=	8
Bit 4:	2^4	=	16	x	0	=	0
Bit 5:	2^5	=	32	x	1	=	32
Bit 6:	2^6	=	64	x	1	=	64
Bit 7:	2^7	=	128	x	0	=	0
Bit 8:	2^8	=	256	x	0	=	0
Bit 9:	2^9	=	512	x	1	=	512
Bit 10:	2^{10}	=	1024	x	0	=	0
Bit 11:	2^{11}	=	2048	x	0	=	0
Bit 12:	2^{12}	=	4096	x	1	=	4096
Bit 13:	2^{13}	=	8192	x	1	=	8192
Bit 14:	2^{14}	=	16384	x	1	=	16384
Bit 15:	2^{15}	=	32768	x	1	=	32768

Low word (decimal): 62 059

- The same principle applies to the High word:
- In the example:
  High word (hexadecimal): 000B
  High word (binary): 0000 0000 0000 1011
  High word (decimal): 11
- The calculated values are entered in the appropriate entry lines of the parameter mask for the BL20 counter module (measurement mode).

Figure 71: Entering the upper measuring limit as a High and Low word

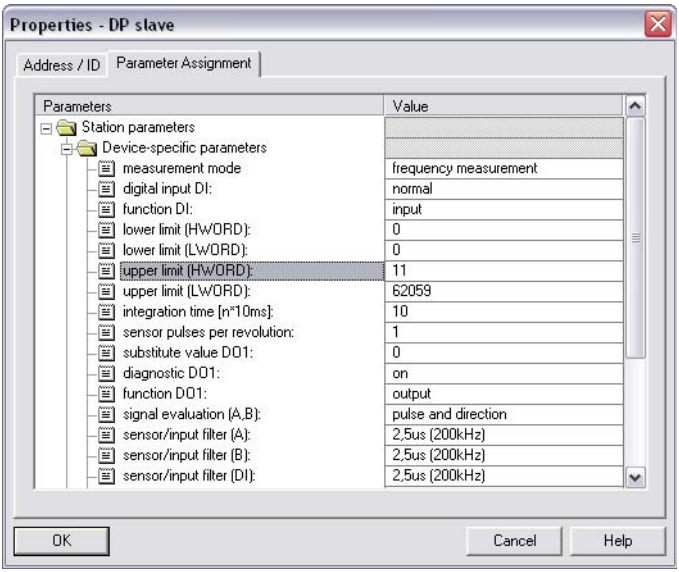

Integration of the RS232 module BL20-1RS232

Data Image

Process Input data (PDin)

The incoming data are stored in the receive-buffer of the BL20-1RS232 module, segmented and transferred to the PLC via the module bus and the gateway.

The transmission is realized in a 8-byte format, structured as follows:

- 6 byte user data
- 1 byte diagnostic data
- 1 status byte, used to guarantee error free data-transmission.

Figure 72: Data image PLC input data

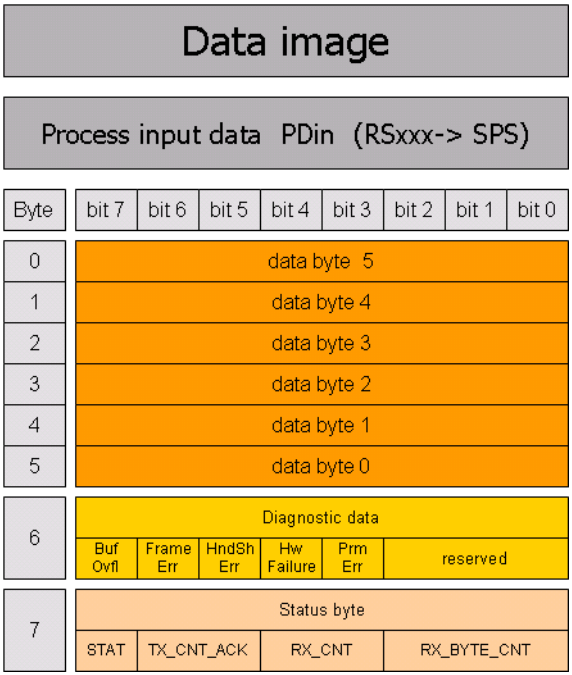

Table 90: Meaning of the data bits (process input)

Designation	Value	Meaning
BufOvfl; FrameErr; HndShErr; HwFailure; PrmErr	0 - 255	Diagnostic information (correspond to the diagnostic information in the diagnosis telegram). These diagnostics are always displayed and independent to the setting of the parameter „Diagnostics“.
STAT	0-1	1: The communication with the data terminal equipment (DTE) is error free 0: The communication with the data terminal equipment (DTE) is disturbed. A diagnosis message is generated if the parameter „Diagnostics“ is set to „0/ release“. The diagnostic data show the cause of the communication disturbance. The user has to set back this bit in the process output data by using STATRES.
TX_CNT_ACK	0-3	The value TX_CNT_ACK is a copy of the value TX_CNT. TX_CNT has been transmitted together with the last data segment of the process output data. TX_CNT_ACK is an acknowledge for the successful transmission of the data segment with TX_CNT.
RX_CNT	0-3	This value is transferred together with every data segment. The RX_CNT values are sequential: 00->01->10->11->00... (decimal: 0->1->2->3->0...) Errors in this sequence show the loss of data segments.
RX_BYTE_CNT	0-7	Number of the valid bytes in this data segment.

Process Output Data (PDout)

Process output data are data which are sent from the PLC via the gateway and the BL20-1RS232 module to a connected field device.

The data received from the PLC are loaded into the transmit- buffer in the BL20-1RS232 module.

The fieldbus specific transmission for PROFIBUS-DP is realized in a 8-byte format which is structured as follows:

- 6 byte user data
- 1 byte containing signals to flush the transmit- and receive buffer.
- 1 control byte, used to guarantee error free data-transmission.

Figure 73: Process output data

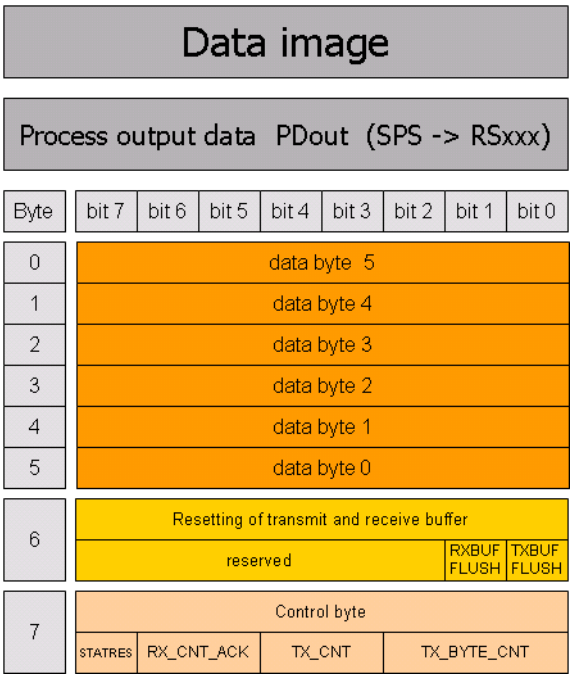

Table 91: Meaning of the data bits (process output)

Designation	Value	Meaning
RXBUF FLUSH	0 - 1	This bit is used to flush the receive-buffer. If STATRES = 1: The command RXBUF FLUSH = 1 is ignored. If STATRES = 0: RXBUF FLUSH = 1 causes the flushing of the receive-buffer.
TXBUF FLUSH	0-1	This bit is used to flush the transmit-buffer. If STATRES = 1: The command TXBUF FLUSH = 1 is ignored. If STATRES = 0: TXBUF FLUSH = 1 causes the flushing of the tranceive-buffer.
STATRES	0-1	This bit is set to reset the STAT bit in the process input data. With the change from 1 to 0 the STAT bit is reset (from 0 to 1). If this bit is 0, all changes in TX_BYTE_CNT, TX_CNT and RX_CNT_ACK are ignored. Flushing the transmit-/ receive-buffer with RXBUF FLUSH/ TXBUF FLUSH is possible. If this bit is 1 or with the change from 0 to 1, the flushing of the transmit-/ receive-buffer with RXBUF FLUSH/ TXBUF FLUSH is not possible.

	RX_CNT_ACK	0-3	The value RX_CNT_ACK is a copy of the value RX_CNT. TX_CNT has been transmitted together with the last data segment of the process input data. TX_CNT_ACK is an acknowledge for the successful transmission of the data segment with RX_CNT.
	TX_CNT	0-3	This value is transferred together with every data segment. The TX_CNT values are sequential: 00->01->10->11->00... (decimal: 0->1->2->3->0...) Errors in this sequence show the loss of data segments.
	TX_BYTE_CNT	0 - 7	Number of the valid user data in this data segment. In PROFIBUS-DP, the data segments contain a maximum number of 6 bytes of user data.

Integration of the RS485/422 module BL20-1RS485/422

Data Image

Process Input data (PDin)

The incoming data are stored in the receive-buffer of the BL20-1RS485/422 module, segmented and transferred to the PLC via the module bus and the gateway.

The transmission is realized in a 8-byte format, structured as follows:

- 6 byte user data
- 1 byte diagnostic data
- 1 status byte, used to guarantee error free data-transmission.

Figure 74: Data image PLC input data

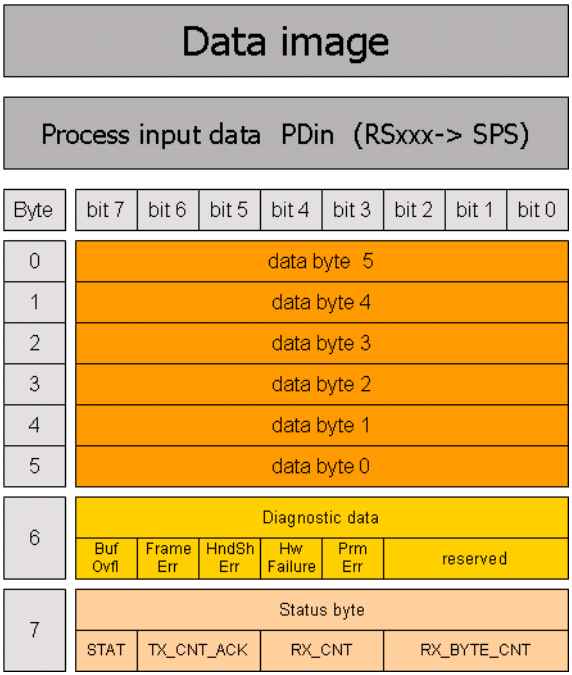

Table 92: Meaning of the data bits (process input)

Designation	Value	Meaning
BufOvfl; FrameErr; HndShErr; HwFailure; PrmErr	0 - 255	Diagnostic information (correspond to the diagnostic information in the diagnosis telegram). These diagnostics are always displayed and independent to the setting of the parameter „Diagnostics“.
STAT	0-1	1: The communication with the data terminal equipment (DTE) is error free 0: The communication with the data terminal equipment (DTE) is disturbed. A diagnosis message is generated if the parameter „Diagnostics“ is set to „0/ release“. The diagnostic data show the cause of the communication disturbance. The user has to set back this bit in the process output data by using STATRES.
TX_CNT_ACK	0-3	The value TX_CNT_ACK is a copy of the value TX_CNT. TX_CNT has been transmitted together with the last data segment of the process output data. TX_CNT_ACK is an acknowledge for the successful transmission of the data segment with TX_CNT.
RX_CNT	0-3	This value is transferred together with every data segment. The RX_CNT values are sequential: 00->01->10->11->00... (decimal: 0->1->2->3->0...) Errors in this sequence show the loss of data segments.
RX_BYTE_CNT	0-7	Number of the valid bytes in this data segment.

Process Output Data (PDout)

Process output data are data which are sent from the PLC via the gateway and the BL20-1RS485/422 module to a connected field device.

The data received from the PLC are loaded into the transmit- buffer in the BL20-1RS485/422 module.

The fieldbus specific transmission for PROFIBUS-DP is realized in a 8-byte format which is structured as follows:

- 6 byte user data
- 1 byte containing signals to flush the transmit- and receive buffer.
- 1 control byte, used to guarantee error free data-transmission.

Figure 75: Process output data

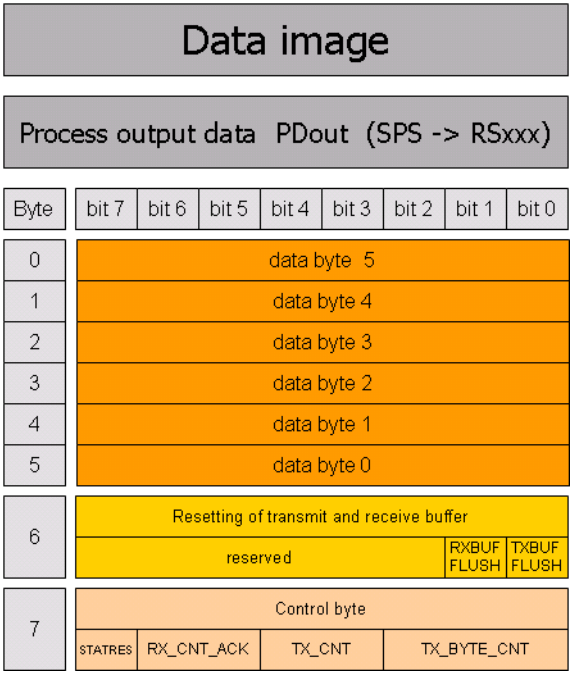

Table 93: Meaning of the data bits (process output)

Designation	Value	Meaning
RXBUF FLUSH	0 - 1	This bit is used to flush the receive-buffer. If STATRES = 1: The command RXBUF FLUSH = 1 is ignored. If STATRES = 0: RXBUF FLUSH = 1 causes the flushing of the receive-buffer.
TXBUF FLUSH	0-1	This bit is used to flush the transmit-buffer. If STATRES = 1: The command TXBUF FLUSH = 1 is ignored. If STATRES = 0: TXBUF FLUSH = 1 causes the flushing of the tranceive-buffer.
STATRES	0-1	This bit is set to reset the STAT bit in the process input data. With the change from 1 to 0 the STAT bit is reset (from 0 to 1). If this bit is 0, all changes in TX_BYTE_CNT, TX_CNT and RX_CNT_ACK are ignored. Flushing the transmit-/ receive-buffer with RXBUF FLUSH/ TXBUF FLUSH is possible. If this bit is 1 or with the change from 0 to 1, the flushing of the transmit-/ receive-buffer with RXBUF FLUSH/ TXBUF FLUSH is not possible.

	RX_CNT_ACK	0-3	The value RX_CNT_ACK is a copy of the value RX_CNT. TX_CNT has been transmitted together with the last data segment of the process input data. TX_CNT_ACK is an acknowledge for the successful transmission of the data segment with RX_CNT.
	TX_CNT	0-3	This value is transferred together with every data segment. The TX_CNT values are sequential: 00->01->10->11->00... (decimal: 0->1->2->3->0...) Errors in this sequence show the loss of data segments.
	TX_BYTE_CNT	0 - 7	Number of the valid user data in this data segment. In PROFIBUS-DP, the data segments contain a maximum number of 6 bytes of user data.

Integration of the SSI module BL20-1SSI

Data image

Process input data (PDin)

The field input data is transferred from the connected field device to the BL20-1SSI module.

The process input data is the data that is transferred to the PLC from the BL20-1SS1 via a gateway.

This is transferred in an 8 byte format as follows:

- 4 bytes are used for representing the data that was read from the register with the address stated at REG_RD_ADR.
- When necessary, 1 byte represents the register address of the read data and an acknowledgement that the read operation was successful.
- 1 byte can be used to transfer status messages of the SSI encoder. This byte also contains an acknowledgement that the write operation to the register was successful and indication of an active write operation.
- 1 byte contains the results of comparison operations with the SSI encoder value.
- 1 byte contains messages concerning the communication status between the BL20-1SSI module and the SSI encoder, as well as other results of comparison operations.

The following table describes the structure of the 8 x 8 bits of the process input data.

STS (or ERR) contains non-retentive status information, i.e. the bit concerned indicates the actual status.

FLAG describes a retentive flag that is set in the event of a particular event. The bit concerned retains the value until it is reset.

Figure 76: Process input data

Data image								
Process input data PDin (SSI -> PLC)								
byte	bit 7	bit 6	bit 5	bit 4	bit 3	bit 2	bit 1	bit 0
0	data byte 3							
1	data byte 2							
2	data byte 1							
3	data byte 0							
	status messages							
4	REG RD ABORT	x	REG RD ADR (MSB bis LSB)					
5	REG WR ACEPT	REG WR AKN	x	x	SSI STS3	SSI STS2	SSI STS1	SSI STS0
6	STS UP	STS DN	REL CMP2	FLAG CMP2	STS CMP2	REL CMP1	FLAG CMP2	STS CMP2
7	diagnostic messages							
	STS STOP	x	x	ERR PARA	STS UFLW	STS OFLW	ERR SSI	SSI DIAG

Table 94: Meaning of the data bits (process input)

Designation	Value	Meaning
REG_RD_DATA	0... 2^{32}-1	Content of the register to be read if REG_RD_ABORT = 0. If REG_RD_ABORT = 1, then REG_RD_DATA = 0.
REG_RD_ABORT	0	The reading of the register stated at REG_RD_ADR was accepted and executed. The content of the register is located in the user data range (REG_RD_DATA Bytes 0-3).
	1	The reading of the register stated at REG_RD_ADR was not accepted.The user data range (REG_RD_DATA Bytes 0-3) is zero.
REG_RD_ADR	0...63	The reading of the register stated at REG_RD_ADR was not accepted.The user data range (REG_RD_DATA Bytes 0-3) is zero.
REG_WR_ACEPT	0	The writing of user data for process output to the register with the address stated at REG_WR_ADR in the process output data could not be executed.
	1	The writing of user process output data to the register with the address stated at REG_WR_ADR in the process output data was successfully completed.

Designation	Value	Meaning
REG_WR_AKN	0	No modification of the data in the register bank by process output, i.e. REG_WR = 0. A write job would be accepted with the next telegram of process output data. (handshake for data transmission to the register.)
	1	A modification of the register contents by a process output was initiated, i.e. REG_WR = 1. A write job would not be accepted with the next telegram of process output data.
SSI_STS3	0	These four bits transfer the status bits of the SSI encoder with the status messages of the SSI module. With some SSI encoders, the status bits are transferred together with the position value.
	1	
SSI_STS2	0	
	1	
SSI_STS1	0	
	1	
SSI_STS0	0	
	1	
STS_UP (LED UP)	0	The SSI encoder values are decremented or the values are constant.
	1	The SSI encoder values are incremented.
STS_DN (LED DN)	0	The SSI encoder values are incremented or the values are constant.
	1	The SSI encoder values are decremented.

Designation	Value	Meaning
REL_CMP2	0	A comparison of the register contents has produced the following result: (REG_SSI_POS) < (REG_CMP2)
	1	A comparison of the register contents has produced the following result: (REG_SSI_POS) ≥ (REG_CMP2)
FLAG_CMP2	0	Default status, i.e. the register contents have not yet matched (REG_SSI_POS) = (REG_CMP2) since the last reset.
	1	The contents of the registers match (REG_SSI_POS) = (REG_CMP2). This marker must be reset with CLR_CMP2 = 1 in the process output data.
STS_CMP2	0	A comparison of the register contents has produced the following result: (REG_SSI_POS) ≠ (REG_CMP2)
	1	A comparison of the register contents has produced the following result: (REG_ SSI_POS) = (REG_CMP2)
REL_CMP1	0	A comparison of the register contents has produced the following result: (REG_SSI_POS) < (REG_CMP1)
	1	A comparison of the register contents has produced the following result: (REG_ SSI_POS) ≥ (REG_CMP1)
FLAG_CMP1	0	Default status, i.e. the register contents have not yet matched (REG_SSI_POS) = (REG_CMP1) since the last reset.
	1	The contents of the registers match: (REG_SSI_POS) = (REG_CMP1). This marker must be reset when CLR_CMP1 = 1 in the process output data.

Designation	Value	Meaning
STS_CMP1	0	A comparison of the register contents has produced the following result: (REG_SSI_POS) ≠ (REG_CMP1)
	1	A comparison of the register contents has produced the following result: (REG_ SSI_POS) = (REG_CMP1)
STS_STOP	0	The SSI encoder is read cyclically.
	1	Communication with the SSI encoder is stopped as STOP = 1 (process output) or ERR_PARA = 1.
ERR_PARA	0	The parameter set of the module has been accepted.
	1	Operation of the module is not possible with the present parameter set.
STS_UFLW	0	A comparison of the register contents has produced the following result: (REG_SSI_POS) ≥ (REG_LOWER_LIMIT)
	1	A comparison of the register contents has produced the following result: (REG_SSI_POS) < (REG_LOWER_LIMIT)
STS_OFLW	0	A comparison of the register contents has produced the following result: (REG_SSI_POS) ≤ (REG_UPPER_LIMIT)
	1	A comparison of the register contents has produced the following result: (REG_SSI_POS) > (REG_UPPER_LIMIT)

Designation	Value	Meaning
ERR_SSI	0	SSI encoder signal present.
	1	SSI encoder signal faulty. (e.g. due to a cable break).
SSI_DIAG	0	No enabled status signal is active (SSI_STSx = 0).
	1	At least one enabled status signal is active (SSI_STSx = 1).

Process output data (PDout)

The field output data is transferred from the BL20-1SSI module to the connected field device.

The process output data is the data that is output from the PLC to the BL20-1SSI module via a gateway.

This is transferred in an 8 byte format as follows:

- 4 bytes are used for representing the data that is to be written to the register with the address specified at REG_WR_DATA.
- 1 byte contains the register address for the data that is to be read with the next response telegram.
- 1 byte contains the register address of the data to be written to bytes 0 to 3 of this telegram and a write request.
- 1 byte is used for controlling the comparison operations.
- 1 byte contains a Stop bit for interrupting communication with the encoder.

Figure 77: Process output data

Data image

Process output data PDout (SPS -> SSI)

byte	bit 7	bit 6	bit 5	bit 4	bit 3	bit 2	bit 1	bit 0
0	data byte 3							
1	data byte 2							
2	data byte 1							
3	data byte 0							
4	control data							
	x	x	REG RD ADR					
5	REG WR	x	REG WR ADR					
6	x	x	x	CLR CMP2	EN CMP2	x	CLR CMP1	EN CMP1
7	STOP	x	x	x	x	x	x	x

Table 95: Meaning of the data bits (process output)

Designation	Value	Meaning
REG_WR_DATA	0... 2^{32}-1	Value to be written to the register with the address stated at REG_WR_ADR.
REG_RD_ADR	0...63	Address of the register to be read. If the read operation is successful (REG_RD_ABORT = 0), the user data is located in REG_RD_DATA of the process input data (bytes 4 – 7).
REG_WR	0...63	Default status, i.e. there is no request to overwrite the content of the register with the address stated at REG_WR_ADR with REG_WR_DATA. Bit REG_WR_AKN is reset (0) if necessary.
	1	Request to overwrite the content of the register ith the address stated at REG_WR_ADR with REG_WR_DATA.
REG_WR_ADR	0...63	Address of the register to be written with REG_WR_DATA.
CLR_CMP2	0	Default status, i.e. no reset of FLAG_CMP2 active.
	1	Reset of FLAG_CMP2 active
EN_CMP2	0	Default status, i.e. the data bits REL_CMP2, STS_CMP2 and FLAG_CMP2 always have the value 0, irrespective of the actual SSI encoder value.
	1	Comparison active, i.e. the data bits REL_CMP2,STS_CMP2 and FLAG_CMP2 have a value based on the result of the comparison with the SSI encoder value.
CLR_CMP1	0	Default status, i.e. reset of FLAG_CMP1 not active.
	1	Reset of FLAG_CMP1 active

Designation	Value	Meaning
EN_CMP1	0	Default status, i.e. the data bits REL_CMP1, STS_CMP1 and FLAG_CMP1 always have the value 0, irrespective of the actual SSI encoder value.
	1	Comparison active, i.e. the data bits REL_CMP1, STS_CMP1 and FLAG_CMP1 have a value based on the result of the comparison with the SSI encoder value.
STOP	0	Request to read the SSI encoder cyclically
	1	Request to interrupt communication with the encoder

Integration of the SWIRE Module BL20-E-1SWIRE

The module can be integrated if the gateway firmware is at least Version 1.51.

Data mapping under PROFIBUS-DP

Process input

The field input data is transferred from the connected SWIRE-BUS to the BL20-E-1SWIRE module. The process input data is the data that is transferred by the BL20-E-1SWIRE module via a gateway to the PLC. The transfer is carried out in 8-byte format. 4 bits are reserved for each SWIRE slave. The following information can be transferred:

- Contactor coil on/off
- Motor-protective circuit-breaker off or tripped/on
- Status of the slave o.k./diagnostics message present

Table 96: Data structure

Byte	Bit 7	Bit 6	Bit 5	Bit 4	Bit 3	Bit 2	Bit 1	Bit 0
1	SWIRE Slave 2				SWIRE Slave 1			
2	SWIRE Slave 4				SWIRE Slave 3			
3	SWIRE Slave 6				SWIRE Slave 5			
4	SWIRE Slave 8				SWIRE Slave 7			
5	SWIRE Slave 10				SWIRE Slave 9			
6	SWIRE Slave 12				SWIRE Slave 11			
7	SWIRE Slave 14				SWIRE Slave 13			
8	SWIRE Slave 16				SWIRE Slave 15			

The data of SWIRE slave 1 is the data of the first physical slave on the SWIRE bus. The remaining slaves are assigned in consecutive order accordingly. The meaning of the data of an SWIRE slave depends on the product concerned.

Meaning of the 4-bit process input data on an SWIRE-DIL device:

Tabelle 8: Process input for i SWIRE-DIL

Bit 7	Bit 6	Bit 5	Bit 4
SDx / free	free	PKZSTx	SIx

The following table shows the meaning of the data bits:

Table 97: Data bits

Designation	Status	Comment	
SIx		Switch status, relay x	
		SIx supplies the switch status of the contactor coil of the SWIRE bus slave as a feedback signal. SIx makes it possible to check whether the set switch status was executed by a mechanical connection. This must take into account the time delay between the setting of an output, a mechanical execution and the subsequent feedback signal.	
0	Off	Off	Contactor coil is switched off
1	On	On	Contactor coil is switched on
PKZSTx		Switch status, PKZ x	
0	Off	Off	The motor-protective circuit-breaker is off or has tripped
1	On	On	The motor-protective circuit-breaker is switched on

Designation	Status	Comment	
SDx		Communication error, slave x	
		Setting the NDDIAG parameter copies the slave diagnostics message (input byte 1 / bit 3) to the feedback interface. The information is provided as status information in the PLC for the user.	
0	ON LINE	ON LINE	Status of slave x: Everything o.k.
1	OFF LINE	OFF LINE	Status of slave x: Slave diagnostics message present

Process output

Field output data is output from an BL20-E-1SWIRE module to a field device. The process output data is the data that is transferred by the PLC via a gateway to the BL20-E-1SWIRE module. The transfer is carried out in 8-byte format. 4 bits are reserved for each SWIRE slave. The following information is transferred:

- Switch status of contactor coil on/off

Table 98: Data structure

Byte	Bit 7	Bit 6	Bit 5	Bit 4	Bit 3	Bit 2	Bit 1	Bit 0
1	SWIRE Slave 2				SWIRE Slave 1			
2	SWIRE Slave 4				SWIRE Slave 3			
3	SWIRE Slave 6				SWIRE Slave 5			
4	SWIRE Slave 8				SWIRE Slave 7			
5	SWIRE Slave 10				SWIRE Slave 9			
6	SWIRE Slave 12				SWIRE Slave 11			
7	SWIRE Slave 14				SWIRE Slave 13			
8	SWIRE Slave 16				SWIRE Slave 15			

The data of SWIRE slave 1 is the data of the first physical slave on the SWIRE bus. The remaining slaves are assigned in the same way. The meaning of the data of an SWIRE slave depends on the product concerned.

Meaning of the 4-bit process output data on an SWIRE-DIL device:

Table 99: Process output for bei SWIRE-DIL

Bit 7	Bit 6	Bit 5	Bit 4
free	free	free	SOx

The following table shows the meaning of the data bits:

Table 100: Data bits

Bez.	Zustand	Bemerkung		
SOx		Relay x relay x		
		SOx is transferred as the switch status of the contactor coil from the SWIRE bus master to the appropriate SWIRE bus slave.		
	0	Off	Off	Contactor not switched on
	1	On	On	Contactor is switched on

Diagnostics

Diagnostics data contains the error messages for the higher-level system that are related to operation and application.

The diagnostics indication mode for the PROFIBUS-DP gateway can be set in two ways with the “Gateway diagnostics” parameter. “Devices, ID, Channel diagnostics” selects a more detailed diagnostics indication. The diagnostics message then consists of:

- 2 bytes of gateway diagnostics (device-related diagnostics)
- 64 bits of ID-specific diagnostics
- n × 3 bytes channel-specific diagnostics (n: number of channels with active diagnostics)

The channel specific diagnostics indication enables the name of the error type to be displayed in plain text (e.g. Parameter error) through the use of an error number.

When “Device-related Diagnostics” is selected, an abbreviated diagnostics message is generated that simply shows the gateway diagnostics (device-related diagnostics). The diagnostics bytes of all station modules are attached that support diagnostics.

	Bit 7	Bit 6	Bit 5	Bit 4	Bit 3	Bit 2	Bit 1	Bit 0
Byte 1	GENE-RAL$_{ERR}$	U$_{SWERR}$	free	COM$_{ERR}$	free	RDY$_{ERR}$	free	SW$_{ERR}$
Byte 2	free	U$_{AUXERR}$	TYP$_{ERR}$	free	PKZ$_{ERR}$	free	SD$_{ERR}$	free
TYP$_{ERR}$ field								
Byte 3	TYP$_{ERR}$ S8	TYP$_{ERR}$ S7	TYP$_{ERR}$ S6	TYP$_{ERR}$ S5	TYP$_{ERR}$ S4	TYP$_{ERR}$ S3	TYP$_{ERR}$ S2	TYP$_{ERR}$ S1
Byte 4	TYP$_{ERR}$ S16	TYP$_{ERR}$ S15	TYP$_{ERR}$ S14	TYP$_{ERR}$ S13	TYP$_{ERR}$ S12	TYP$_{ERR}$ S11	TYP$_{ERR}$ S10	TYP$_{ERR}$ S9
Slave diagnostics bit field								
Byte 5	SD$_{ERR}$S 8	SD$_{ERR}$S 7	SD$_{ERR}$S 6	SD$_{ERR}$S 5	SD$_{ERR}$S 4	SD$_{ERR}$S 3	SD$_{ERR}$S 2	SD$_{ERR}$S 1
Byte 6	SD$_{ERR}$S 16	SD$_{ERR}$S 15	SD$_{ERR}$S 14	SD$_{ERR}$S 13	SD$_{ERR}$S 12	SD$_{ERR}$S 11	SD$_{ERR}$S 10	SD$_{ERR}$S 9
PKZ field								
Byte 7	PKZ$_{ERR}$ S8	PKZ$_{ERR}$ S7	PKZ$_{ERR}$ S6	PKZ$_{ERR}$ S5	PKZ$_{ERR}$ S4	PKZ$_{ERR}$ S3	PKZ$_{ERR}$ S2	PKZ$_{ERR}$ S1
Byte 8	PKZERRS16	PKZ$_{ERR}$ S15	PKZ$_{ERR}$ S14	PKZ$_{ERR}$ S13	PKZ$_{ERR}$ S12	PKZ$_{ERR}$ S11	PKZ$_{ERR}$ S10	PKZ$_{ERR}$ S9

The following table shows the meaning of the diagnostics bits:

Tabelle 9: Meaning of diagnostics data bits

Designation	Value	Meaning	
Byte 1			
SW_{ERR}	SWIRE MASTER		
	The configuration was accepted according to the parameter setting and the SWIRE bus is in data exchange mode.		
	0	Data exchange	The bus is in data exchange mode
	1	Offline	The configuration was not accepted, the bus does not switch to data exchange mode. (SW LED flashing)
RDY_{ERR}	PLC SLAVE		
	Parameter setting is faulty. The ACTUAL configuration was accepted according to the SET configuration and the data exchange with the higher-level is o.k.		
	0	Data exchange	The bus is in data exchange mode
	1	Offline	The configuration was not accepted, the bus does not switch to data exchange mode. (Rdy LED flashing)

Designation	Value	Meaning	
Byte 1			
COM_{ERR}	Communication SWIRE		
	A communication error is present, such as a slave is no longer reached, its internal timeout has elapsed or communication is faulty. The master cannot carry out data exchange with at least one slave.		
	0	OK	Error
	1	faulty	No error.
U_{SWERR}	Voltage U_{SW}		
	Voltage fault in U_{SW}, voltage U (17 VDC) for supplying the SWIRE slaves		
	0	OK	No error present.
	1	Undervoltage	An error is present
$GENERAL_{ERR}$	Error message		
	The creation of a function block shows that systems / function blocks for the general checking of a slave for any diagnostics messages present only check the first byte.		
	0	None	No diagnostics message present
	1	Present	One/several diagnostics messages present

Designation	Value	Meaning	
Byte 2			
SD_{ERR}	Communication SWIRE slave		
	If the parameter $SD_{ERR}A$ is set for group diagnostics, this bit indicates an error as soon as only one slave on the bus sets its SD error bit.		
	0	OK	No error is present or diagnostics function has been deactivated via the parameter setting.
	1	faulty	Error
PKZ_{ERR}	Overcurrent protective circuit-breaker		
	If the parameter $PKZ_{ERR}A$ is set for group diagnostics, this bit indicates an error as soon as only one PKZ of a slave has tripped.		
	0	OK	No PKZ has tripped or diagnostics function has been deactivated via the parameter setting.
	1	Tripping	At least one PKZ has tripped.

Designation	Value	Meaning	
Byte 2			
$TYPE_{ERR}$	Configuration		
	If the $TYPE_{ERR}$A parameter is set for group diagnostics, this bit indicates an error as soon as the ACTUAL configuration of a slave does not match the SET configuration for this position.		
	0	OK	The ACTUAL configuration fully matches the SET configuration or diagnostics function has been deactivated via the parameter.
	1	faulty	The actual configuration does not fully match set configuration.
U_{AUXERR}	Voltage U_{AUX}		
	If the U_{AUXERR}A parameter is activated, U_{AUXERR} will generate an error message as soon as the power supply goes below the level at which the function of the relays is not guaranteed.		
	0	OK	Contactor supply voltage is o.k. (> 20 VDC) or diagnostics function has been deactivated via this parameter.
	1	Undervoltage	Contactor supply voltage is not o.k. (< 18 VDC).

Designation	Value	Meaning	
Byte 3,4			
$TYPE_{ERR}Sx$	Device configuration, slave x		
	Info field for the individual indication of a configuration error as error message. If the $TYPE_{INFO}A$ parameter has been set for single diagnostics, this bit field indicates the error, as soon as the ACTUAL configuration of the slave was not accepted and is therefore not enabled for data exchange. The diagnostics LED of the slave flashes.		
	0	OK	No configuration error is present and the slave is in data exchange mode or diagnostics function has been deactivated via the parameter setting.
	1	Incorrect	No configuration error present and the slave is NOT in data exchange mode
Byte 5,6			
$SD_{ERR}Sx$	Communication, slave x		
	Info field for the individual indication of the release of the slave diagnostics as error message. If the $SD_{INFO}A$ is set for single diagnostics, this bit field indicates the error as soon as the slave diagnostic message of the slave Sx is triggered.		
	0	OK	No error is present or diagnostics function has been deactivated via the parameter setting.
	1	Offline	A diagnostics message is present.

Designation	Value	Meaning
Byte 7,8		
$PKZ_{ERR}Sx$	Overcurrent protective circuit-breaker, slave x	
	Info field for the individual indication of the tripping of a motor-protective circuit-breaker (PKZ) as error message. If the $PKZ_{INFO}A$ is set for single diagnostics, this bit field indicates the error as soon as the PKZ of the slave Sx has tripped.	
	0 OK	The PKZ of the slave has not tripped or diagnostics function has been deactivated via the parameter setting.
	1 Tripped	The PKZ of the slave has tripped.

Note

The error messages $U_{AUX}ERR$, $TYPE_{ERR}$, $TYPE_{ERR}Sx$, PKZ_{ERR}, $PKZ_{ERR}Sx$, SD_{ERR} and $SD_{ERR}Sx$ can be deactivated via the parameter setting.

Parameter

Parameters must be assigned to the module for correct operation of the application and in order to make it functional.

	Bit 7	Bit 6	Bit 5	Bit 4	Bit 3	Bit 2	Bit 1	Bit 0
Byte 1	reserved	free	free	free	MNA	Configu-ration	Disable Cfg	free
Byte 2	free	U_{AUXERR}	TYP_{ERR}	TYP_{INFO}	PKZ_{ERR}	PKZ_{INFO}	SD_{ERR}	SD_{INFO}
Byte 3	reserved							
Byte 4	Lifeguarding time							
Byte 5	$SD_{DIAG}S8$	$SD_{DIAG}S7$	$SD_{DIAG}S6$	$SD_{DIAG}S5$	$SD_{DIAG}S4$	$SD_{DIAG}S3$	$SD_{DIAG}S2$	$SD_{DIAG}S1$
Byte 6	$SD_{DIAG}S16$	$SD_{DIAG}S15$	$SD_{DIAG}S14$	$SD_{DIAG}S13$	$SD_{DIAG}S12$	$SD_{DIAG}S11$	$SD_{DIAG}S10$	$SD_{DIAG}S9$
Byte 7	reserved							
Byte 8	reserved							
Byte 9 - 24	Type designation slave 1 - 16							

The following table shows the meaning of the parameter bits:

Table 101: Meaning of the parameter bits

Designation	Status	
Byte 1		
Disable Cfg	Automatic SWIRE configuration	
	Disabling of the acceptance of the physically present configuration as ACTUAL configuration on manual pushbutton actuation.	
	0 = Inactive **A**	The physically present configuration of the SWIRE bus is only accepted as the ACTUAL configuration by pressing the CFG button. The comparison with the SET configuration is then carried out
	1 = Active	The physically present configuration is automatically accepted as the ACTUAL configuration and then compared with the SET configuration.
Configuration	PLC configuration check	
	The configuration check parameter enables a comparison of the set and actual configuration based on the device ID.	
	0 = Active **A**	Configuration check based on device ID. Only SWIRE slaves with a device ID completely matching the set configuration are accepted on the bus
	1 = Inactive	All slaves are mapped in 4Bit INPUT / 4Bit OUTPUT without checking the device ID.

Designation	Status	
Byte 1		
MNA	Configuration check	
	If the ACTUAL configuration of the SWIRE bus does not match the SET configuration, the master only exchanges data with the correctly configured and functional slaves.	
	0 = Bus based **A**	No data exchange with a slave with an incomplete / incorrect configuration.
	1 =Slave based	The bus also goes into operation with the correctly configured slaves even if the configuration is incomplete. This means in position oriented addressing: All slaves detected by the daisy chain configuration with a position that matches the set configuration are started up. Slaves that do not match the set configuration are inactive.
Byte 2		
SD_{INFO}	Slave error field	
	Activate slave diagnostics info field SD_{ERR}Sx. As soon as a slave on the bus sets its error bit, this is indicated individually as an error depending on the parameter setting.	
	0 = Active **A**	Single diagnostics is activated
	1 = Inactive	Single diagnostics is not activated

Designation	Status
Byte 2	
SD_{ERR}	Group error - slave error
	Activate slave diagnostics $SD_{ERR}Sx$. As soon as only one slave on the bus sets its error bit, this is indicated as a group error depending on the parameter setting.
	0 = Active **A** Group diagnostics is activated
	1 = Inactive Group diagnostics is not activated
PKZ_{INFO}	PKZ error field
	Activate slave diagnostics info field $PKZ_{ERR}Sx$. As soon as a slave on the bus clears its PKZ bit, this is indicated as an individual error depending on the parameter setting.
	0 = Active **A** Single diagnostics is activated
	1 = Inactive Single diagnostics is not activated
PKZ_{ERR}	Group PKZ error field
	Activate slave diagnostics $PKZ_{ERR}Sx$. As soon as only one slave on the bus clears its PKZ bit, this is indicated as an error depending on the parameter setting.
	0 = Active **A** Group diagnostics is activated
	1 = Inactive Group diagnostics is not activated

Designation	Status	
Byte 2		
$TYPE_{INFO}$	Configuration error field	
	As soon as a slave on the bus does not match the set configuration and therefore cannot be started, this is indicated as an individual error depending on the parameter set.	
	Active	Single diagnostics is activated
	Inactive	Single diagnostics is not activated
$TYPE_{ERR}$	Group configuration error field	
	Activate slave diagnostics $TYPE_{ERR}$Sx. As soon as only one slave on the bus is incorrectly configured, this is indicated as an error depending on the parameter setting.	
	Active	Group diagnostics is activated
	Inactive	Group diagnostics is not activated
U_{AUXERR}	Error message -U_{AUX}-	
	Activate system diagnostics U_{AUXERR}. U_{AUXERR} will generate an error message as soon as the power supply goes below a level at which the function of the relays is not guaranteed.	
	Active	Error message U_{AUXERR} activated
	Inactive	Error message U_{AUXERR} not activated
Byte 3	reserved	
Reserved		

Designation	Status	
Byte 4		
Lifeguarding	Lifeguarding time of the SWIRE slaves	
	Setting of lifeguarding time, timeout time up to automatic reset of the slaves in the event of communication failure. (n × 10ms) (Default 1s) 0xFF: Lifeguarding off	
Byte 5,6		
$SD_{DIAG}Sx$	Input bit communication error, slave x	
	Slave diagnostics message from Byte 1 / Bit 7 is accepted in the feedback interface as Bit4	
	Active	$SD_{DIAG}Sx$ is accepted
	Inactive	$SD_{DIAG}Sx$ is not accepted
Byte 7, 8	reserved	
Byte 9-24		
Device ID, slave x	TYPE setting for the LIN slave at position x on the SWIRE bus	
	SWIRE-DIL-MTB (: 0xFF)	
	Basic setting (no slave)	

8 BL20-Approvals for Zone 2/ Division 2

Certified BL20-Components 2

Certificates for Europe 4

Type Examination Certificate 4
ATEX IEC Rev.1.doc.....10
Declaration of Conformity/ Konformitätserklärung.....11

Zertifikate für Europa 12

Baumusterprüfbescheinigung 12
ATEX IEC Rev.1.doc.....18
Declaration of Conformity/Konformitätserklärung.....19

Certificates IECEx 20

IECEx Certificate of Conformity 20
ATEX IEC Rev.1.doc.....25

Certificates for the USA..... 26

Certificate Of Compliance 26
Installation Drawings 30

Certificates for Canada 32

Certificate Of Compliance 32
Installation Drawings 36

Certified BL20-Components

Attention

Only the BL20-components listed in the following are approved for the usage in Zone 2/ Division 2!

Gateways

- BL20-GWBR-PBDP
- BL20-GWBR-DNET
- BL20-GWBR-CANOPEN
- BL20-GW-DPV1
- BL20-GW-EN
- BL20-GW-EN-IP
- BL20-PG-EN-IP
- BL20-PG-EN

Digital input modules

- BL20-2DI-24VDC-P
- BL20-2DI-24VDC-N
- BL20-4DI-24VDC-P
- BL20-4DI-24VDC-N
- BL20-4DI-NAMUR
- BL20-32DI-24VDC-P
- BL20-E-8DI-24VDC-P
- BL20-E-16DI-24VDC-P

Analog input modules

- BL20-2AI-I(0/4...20MA)
- BL20-2AI-U(-10/0...+10VDC)
- BL20-2AI-PT/NI-2/3
- BL20-2AI-THERMO-PI
- BL20-4AI-U/I

Digital output modules

- BL20-2DO-24VDC-0,5A-P
- BL20-2DO-24VDC-0,5A-N
- BL20-2DO-24VDC-2A-P
- BL20-4DO-24VDC-0,5A-P
- BL20-16DO-24VDC-0,5A-P
- BL20-32DO-24VDC-0,5A-P
- BL20-E-8DO-24VDC-0,5A-P
- BL20-E-16DO-24VDC-0,5A-P

Analog output modules

- BL20-2AO-I(0/4...20MA)
- BL20-2AO-U(-10/0...+10VDC)

Relay modules

- BL20-2DO-R-NC
- BL20-2DO-R-NO
- BL20-2DO-R-CO

Technology modules

- BL20-1CNT-24VDC
- BL20-1RS232
- BL20-1RS485/422
- BL20-1SSI

Power supply modules

- BL20-BR-24VDC-D
- BL20-PF-24VDC-D

RFID modules

- BL20-2RFID-A
- BL20-2RFID-C

Certificates for Europe

Type Examination Certificate

1 **TYPE EXAMINATION CERTIFICATE**

2 **Equipment or Protective systems intended for use in Potentially Explosive Atmospheres - Directive 94/9/EC**

3 Type Examination Certificate No: **FM07ATEX0040X**

4 Equipment or protective system: (Type Reference and Name) **BL20 Modular I/O Bus Terminal System**

5 Name of Applicant: **Hans Turck GmbH & Co KG**

6 Address of Applicant: **Witzlebenstrasse 7**
DE 45472 Mülheim an der Ruhr
GERMANY

7 This equipment or protective system and any acceptable variation thereto is specified in the schedule to this certificate and documents therein referred to.

8 FM Approvals Ltd. certifies that this equipment has been found to comply with the Essential Health and Safety Requirements relating to the design and construction of equipment intended for use in potentially explosive atmospheres given in Annex II to the Directive.
The examination and test results are recorded in confidential report number 3030839EC dated 21st January, 2008.

9 Compliance with the Essential Health and Safety Requirements, with the exception of those identified in item 15 of the schedule to this certificate, has been assessed by compliance with the following documents: EN 60079-0:2006 and EN 60079-15:2005

10 If the sign 'X' is placed after the certificate number, it indicates that the equipment is subject to special conditions for safe use specified in the schedule to this certificate.

11 This Type Examination certificate relates only to the design, examination and tests of the specified equipment or protective system in accordance to the directive 94/9/EC. Further requirements of the Directive apply to the manufacturing process and supply of this equipment or protective system. These are not covered by this certificate.

12 The marking of the equipment or protective system shall include:

II 3 G Ex nA II T4 **Ta = 0°C to +55°C**

II 3 G Ex nA nC II T4 **Ta = 0°C to +55°C (Relay Modules only)**

Andrew Was
General Manager, FM Approvals Ltd.

Issue date: 21st January, 2008

THIS CERTIFICATE MAY ONLY BE REPRODUCED IN ITS ENTIRETY AND WITHOUT CHANGE

FM Approvals Ltd. 1 Windsor Dials, Windsor, Berkshire, UK. SL4 1RS
T: +44 (0) 1753 750 000 F: +44 (0) 1753 868 700 E-mail: atex@fmapprovals.com www.fmglobal.com

FM F ATEX 029 (Feb/07) Page 1 of 6

SCHEDULE

FM Approvals

to Type Examination Certificate No. FM07ATEX0040X

13 **Description of Equipment or Protective System:**

The BL20 I/O Bus Terminal System is a modular system and offers gateways for communication with bus system such as PROFIBUS, DeviceNet™ and CanOpen. There are a number of I/O modules, both digital and analogue, for connection to unspecified field devices. In addition to the analogue and digital modules there are a number of modules for specific applications such as a counter or RS232 interfaces and for relay outputs. The modules plug in to bases which are used to mount the modules and which also carry the electrical power and signals via the bus to the Power Feed Modules and Gateway Modules. The bus has an upper operational limit, but this can be increased by use of an intermediate power feed module. User connections are only made to the Gateway modules and to the signal terminals on the individual modules.

BL20 Modular I/O Bus Terminal System

Module	Description
BL20-2DI-24VDC-P	2 channel digital input modules – pnp
BL20-2DI-24VDC-N	2 channel digital input modules - npn
BL20-4DI-24VDC-P	4 channel digital input modules - pnp
BL20-4DI-24VDC-N	4 channel digital input modules - npn
BL20-4DI-NAMUR	4 channel digital input modules – NAMUR input
BL20-32DI-24VDC-P	32 channel digital input modules -pnp
BL20-2AI-I(0/4...20MA)	2 channel analogue input module – current
BL20-2AI-U(-10/0...+10VDC)	2 channel analogue input module – voltage
BL20-2AI-PT/NI-2/3	2 channel analogue input module – platinum and nickel resistance elements
BL20-2AI-THERMO-PI	2 channel analogue input module – thermoelements
BL20-4AI-U/I	4 channel analogue input module – current or voltage
BL20-2DO-24VDC-0,5A-P	2 channel digital output – 0.5A - pnp
BL20-2DO-24VDC-0,5A-N	2 channel digital output – 0.5A - npn
BL20-2DO-24VDC-2A-P	2 channel digital output – 2.0A - pnp
BL20-4DO-24VDC-0,5A-P	4 channel digital output – 0.5A - pnp
BL20-16DO-24VDC-0,5A-P	16 channel digital output – 0.5A - pnp
BL20-32DO-24VDC-0,5A-P	32 channel digital output – 0.5A - pnp
BL20-2AO-I(0/4...20MA)	2 channel analogue output module – current
BL20-2AO-U(-10/0...+10VDC)	2 channel analogue output module – voltage
BL20-1CNT-24VDC	Counter
BL20-1RS232	RS232 interface
BL20-1RS485/422	RS485/422 interface
BL20-1SSI	SSI interface
BL20-BR-24VDC-D	Power Supply Module with internal 5V DC Bus
BL20-PF-24VDC-D	Power Feed Module Field Supply 24V
BL20-E-8DI-24VDC-P	8 channel digital input module – pnp – Economy
BL20-E-16DI-24VDC-P	16 channel digital input module – pnp – Economy
BL20-E-8DO-24VDC-0,5A-P	8 channel digital output module – 0.5A – pnp – Economy
BL20-E-16DO-24VDC-0,5A-P	16 channel digital output module – 0.5A – pnp – Economy
BL20-GWBR-PBDP	Gateway for Profibus-DP with internal 5V DC Bus

THIS CERTIFICATE MAY ONLY BE REPRODUCED IN ITS ENTIRETY AND WITHOUT CHANGE

FM Approvals Ltd. 1 Windsor Dials, Windsor, Berkshire, UK. SL4 1RS
T: +44 (0) 1753 750 000 F: +44 (0) 1753 868 700 E-mail: atex@fmapprovals.com www.fmglobal.com

SCHEDULE

FM Approvals

Member of the FM Global Group

to Type Examination Certificate No. FM07ATEX0040X

Module	Description
BL20-GW-DPV1	Gateway for Profibus-DPV1
BL20-GW-EN	Gateway for Modbus TCP
BL20-GW-EN-IP	Gateway for Ethernet IP
BL20-PG-EN-IP	Programmable Gateway for Ethernet IP
BL20-PG-EN	Programmable Gateway for Modbus TCP
BL20-GWBR-DNET	Gateway for DeviceNet with internal 5V DC Bus
BL20-GWBR-CANOPEN	Gateway for CANopen with internal 5V DC Bus
BL20-2RFID-A	2 Channel RFID module asynchronous
BL20-2RFID-C	2 Channel RFID module cyclic
BL20-2DO-R-NC	2 channel digital output – relay – normally closed
BL20-2DO-R-NO	2 channel digital output – relay – normally open
BL20-2DO-R-CO	2 channel digital output – relay – change over

14 **Special Conditions for Safe Use:**

1. *In Zone 2 installations, the BL20 – Modular I/O Bus-Terminal Systems shall be mounted within a tool-secured enclosure which meets the requirements of EN 60079-0 and EN 60079-15 and is capable of accepting one or more of the Zone 2 wiring methods specified in EN 60079-14. Where installed in outdoor or potentially wet locations, the enclosure shall, at a minimum, meet the requirements of IP54. Where installed in locations providing adequate protection against the entry of solid foreign objects or water capable of impairing safety, the enclosure shall, at a minimum, meet the requirements of IP4X.*
2. *The BL20 I/O Modules shall be installed on an EN 50 022 NS35 rail with each group completed by an end plate (Type BL20-ABPL, Ident-no. 6827123) and sandwiched between two end brackets (Type BL20-WEW-35/2-SW, Ident-no. 6827124).*
3. *The input voltage for the BL20 2-channel digital relay modules shall be limited to 30 Vac or dc (max. contact voltage).*

15 **Essential Health and Safety Requirements:**

The relevant EHSRs that have not been addressed by the standards listed in this certificate have been identified and assessed in the confidential report identified in item 8.

16 **Test and Assessment Procedure and Conditions:**

This Type Examination Certificate is the result of testing of a sample of the product submitted, in accordance with the provisions of the relevant specific standard(s), and assessment of supporting documentation. It does not imply an assessment of the whole production.

Whilst this certificate may be used in support of a manufacturer's claim for CE Marking, FM Approvals Ltd accepts no responsibility for the compliance of the equipment against all applicable Directives in all applications.

This Certificate has been issued in accordance with FM Approvals Ltd's ATEX Certification Scheme.

THIS CERTIFICATE MAY ONLY BE REPRODUCED IN ITS ENTIRETY AND WITHOUT CHANGE

FM Approvals Ltd. 1 Windsor Dials, Windsor, Berkshire, UK. SL4 1RS
T: +44 (0) 1753 750 000 F: +44 (0) 1753 868 700 E-mail: atex@fmapprovals.com www.fmglobal.com

TURCK
Industrial Automation

SCHEDULE

FM Approvals

to Type Examination Certificate No. FM07ATEX0040X

17 **Approved Drawings**

Drawing No:	Revision	Title / Description
EZ 2725-0046-0711-04 / 07299300	30.06.2006	BL20-32DI-24VDC-P Layout
GZ 2725-0046-0710-01 / 12396800	D	BL20-32DI-24VDC-P Placement
ZS 2725-0046-0710-01 / 12396800	C	BL20-32DI-24VDC-P Schematic
EZ 2725-0068-0711-03 / 07257902	A	BL20-4DI-NAMUR Layout
GZ 2725-0068-0710-01 / 12349700	B	BL20-4DI-NAMUR Placement
ZS 2725-0068-0710-01 / 12349700	A	BL20-4DI-NAMUR Schematic
EZ 2725-0015-0711-03 / 07296400	06.06.2006	BL20-2DI-24VDC-P Layout
12393900	17.08.06	BL20-4DI-24VDC-P Placement
ZS 2725-0015-0710-01 / 12393900	C	BL20-2DI-24VDC-P Schematic
EZ 2725-0034-0711-03 / 07297300	22.06.2006	BL20-2DI-24VDC-N Layout
GZ 2725-0034-0710-01 / 12394800	c	BL20-2DI-24VDC-N Placement
ZS 2725-0034-0710-01 / 12394800	c	BL20-2DI-24VDC-N Schematic
EZ 2725-0038-0711-04 / 07297600	30.08.2006	XN-2AI-PT/NI-2/3 Layout
GZ 2725-0038-0710-01 / 12395100	c	XN-2AI-PT/NI-2/3 Placement
ZS 2725-0038-0710-01 / 12395100	D	XN-2AI-PT/NI-2/3 Schematic
EZ 2725-0039-0711-04 / 07297700	04.09.2006	XN-2AI-THERMO-PI Layout
GZ 2725-0039-0710-01 / 12395200	F	XN-2AI-THERMO-PI Placement
ZS 2725-0039-0710-01 / 12395200	D	XN-2AI-THERMO-PI Schematic
EZ 2725-0069-0711-03 / 07299800	06.07.2006	BL20-4AI-U/I Layout
GZ 2725-0069-0710-01 / 12397300	B	BL20-4AI-U/I Placement
ZS 2725-0069-0710-01 / 12397300	c	BL20-4AI-U/I Schematic
EZ 2725-0048-0711-04 / 07298200	07.06.2006	BL20-2AI-I(0/4...20mA) Layout
GZ 2725-0048-0710-01 / 12395700	D	BL20-2AI-I(0/4...20mA) Placement
ZS 2725-0048-0710-01 / 12395700	H	BL20-2AI-I(0/4...20mA) Schematic
EZ 2725-0047-0711-04 / 07298100	06.06.2006	BL20-4DO-24VDC-0.5A-P Layout
GZ 2725-0047-0710-01 / 12395600	C	BL20-4DO-24VDC-0.5A-P Placement
ZS 2725-0047-0710-01 / 12395600	D	BL20-4DO-24VDC-0.5A-P Schematic
EZ 2725-0017-0711-03 / 07296500	07.06.2006	BL20-2DO-24VDC-0.5A-P Layout
GZ 2725-0017-0710-01 / 12394000	A	BL20-2DO-24VDC-0.5A-P Placement
ZS 2725-0017-0710-01 / 12394000	B	BL20-2DO-24VDC-0.5A-P Schematic
EZ 2725-0036-0711-03 / 07297400	23.06.2006	BL20-2DO-24VDC-05A-N Layout
GZ 2725-0036-0710-01 / 12394900	D	BL20-2DO-24VDC-05A-N Placement
ZS 2725-0036-0710-01 / 12394900	E	BL20-2DO-24VDC-05A-N Schematic
EZ 2725-0018-0711-03 / 07296600	07.06.2006	BL20-2DO-24VDC-2A-P Layout
GZ 2725-0018-0710-01 / 12394100	A	BL20-2DO-24VDC-2A-P Placement
ZS 2725-0018-0710-01 / 12394100	B	BL20-2DO-24VDC-2A-P Schematic
EZ 2725-0063-0711-04 / 07299700	06.06.2006	BL20-32DO-24VDC-0.5A-P Layout
GZ 2725-0063-0710-01 / 12397200	D	BL20-32DO-24VDC-0.5A-P Placement
ZS 2725-0063-0710-01 / 12397200	E	BL20-32DO-24VDC-0.5A-P Schematic

THIS CERTIFICATE MAY ONLY BE REPRODUCED IN ITS ENTIRETY AND WITHOUT CHANGE

FM Approvals Ltd. 1 Windsor Dials, Windsor, Berkshire, UK. SL4 1RS
T: +44 (0) 1753 750 000 F: +44 (0) 1753 868 700 E-mail: atex@fmapprovals.com www.fmglobal.com

SCHEDULE

FM Approvals
Member of the FM Global Group

to Type Examination Certificate No. FM07ATEX0040X

Drawing No:	Revision	Title / Description
EZ 2725-0025-0711-02 / 07297100	07.06.2006	BL20-2AO-U(-10/0...+10VDC) Layout
GZ 2725-0025-0710-01 / 12394600	A	BL20-2AO-U(-10/0...+10VDC) Placement
ZS 2725-0025-0710-01 / 12394600	B	BL20-2AO-U(-10/0...+10VDC) Schematic
EZ 2725-0050-0711-04 / 07298300	A	BL20-2AO-I(0/4...20mA) Layout
GZ 2725-0050-0710-01 / 12395800	D	BL20-2AO-I(0/4...20mA) Placement
ZS 2725-0050-0710-01 / 12395800	D	BL20-2AO-I(0/4...20mA) Schematic
EZ 2725-0043-0711-04 / 07297900	30.06.2006	BL20-1CNT-24VDC Layout
GZ 2725-0043-0710-01 / 12395400	G	BL20-1CNT-24VDC Placement
ZS 2725-0043-0710-01 / 12395400	G	BL20-1CNT-24VDC Schematic
EZ 2725-0058-0711-03 / 07299500	03.07.2006	BL20-1RS232 Layout
AWA 2725-0058-0710-01/07600020	24.08.04	XN-RS232 Modification
GZ 2725-0058-0710-01 / 12397000	B	BL20-1RS232 Placement
ZS 2725-0058-0710-01 / 12397000	C	BL20-1RS232 Schematic
EZ 2725-0026-0711-02 / 07297200	06.06.2006	BL20-BR-24VDC-D Layout
GZ 2725-0026-0710-01 / 12394700	A	BL20-BR-24VDC-D Placement
ZS 2725-0026-0710-01 / 12394700	B	BL20-BR-24VDC-D Schematic
EZ 2725-0073-0711-04 / 07299900	06.06.2006	BL20-E-8DI-24VDC-P Layout
EZ 2725-0075-0711-04 / 07300100	07.06.2006	BL20-E-16DI-24VDC-P Layout
GZ 2725-0073-0710-01 / 12397400	C	BL20-E-8DI-24VDC-P Placement
GZ 2725-0075-0710-01 / 12397600	C	BL20-E-16DI-24VDC-P Placement
ZS 2725-0073-0710-01 / 12397400	C	BL20-E-8DI-24VDC-P Schematic
ZS 2725-0075-0710-01 / 12397600	C	BL20-E-16DI-24VDC-P Schematic
EZ 2725-0074-0711-05 / 07300000	06.06.2006	BL20-E-8DO-24VDC-0.5A-P Layout
EZ 2725-0076-0711-03 / 07300200	07.06.2006	BL20-E-16DO-24VDC-0.5A-P Layout
GZ 2725-0074-0710-01 / 12397500	c	BL20-E-8DO-24VDC-0.5A-P Placement
GZ 2725-0076-0710-01 / 12397700	B	BL20-E-16DO-24VDC-0.5A-P Placement
ZS 2725-0074-0710-01 / 12397500	c	BL20-E-8DO-24VDC-0.5A-P Schematic
ZS 2725-0076-0710-01 / 12397700	B	BL20-E-16DO-24VDC-0.5A-P Schematic
EZ 2725-0061-0711-06 / 07300500	A	BL20-GWBR-CANopen Layout
EZ 2725-0061-0721-02 / 07300900	A	BL20-GWBR-CANopen CPU Layout
GZ 2725-0061-0710-01 / 12398000	E	BL20-GWBR-CANopen Placement
GZ 2725-0061-0720-01 / 12398400	B	BL20-GWBR-CANopen CPU Placement
ZS 2725-0061-0710-01 / 12398000	B	BL20-GWBR-CANopen Schematic
ZS 2725-0061-0720-01 / 12398400	B	BL20-GWBR-CANopen CPU Schematic
EZ 2725-0081-0711-02 / 07286801	A	BL20-GW-DPV1(BASIS) Layout
EZ 2725-0081-0721-02 / 07286901	A	BL20-GW-DPV1(CPU) Layout
GZ 2725-0081-0710-01 / 12383800	22.11.2005	BL20-GW-DPV1 Placement
GZ 2725-0081-0720-01 / 12383900	18.11.2005	BL20-GW-DPV1 Placement
ZS 2725-0081-0710-01 / 12383800	22.11.2005	BL20-GW-DPV1 Schematic
ZS 2725-0081-0720-01 / 12383900	18.11.2005	BL20-GW-DPV1 Schematic
EZ 2725-0082-0721-01 / 07289500	A	BL20-GW-EN Layout
EZ 2725-0082-0711-01 / 07289600	A	BL20-GW-EN Layout

THIS CERTIFICATE MAY ONLY BE REPRODUCED IN ITS ENTIRETY AND WITHOUT CHANGE

FM Approvals Ltd. 1 Windsor Dials, Windsor, Berkshire, UK. SL4 1RS
T: +44 (0) 1753 750 000 F: +44 (0) 1753 868 700 E-mail: atex@fmapprovals.com www.fmglobal.com

TURCK
Industrial Automation

SCHEDULE

FM Approvals

to Type Examination Certificate No. FM07ATEX0040X

Drawing No:	Revision	Title / Description
GZ 2725-0082-0720-01 / 12386300	20.12.2005	BL20-GW-EN Placement
GZ 2725-0082-0710-01 / 12386400	23.12.2005	BL20-GW-EN Placement
ZS 2725-0082-0720-01 / 12386300	20.12.2005	BL20-GW-EN Schematic
ZS 2725-0082-0710-01 / 12386400	23.12.2005	BL20-GW-EN Schematic
EZ 2725-0077-0711-01 / 07279300	A	BL20-2RFID-A Layout
GZ 2725-0077-0710-01 / 12374300	02.11.2005	BL20-2RFID Placement
ZS 2725-0077-0710-01 / 12374300	01.06.2006	BL20-2RFID Schematic
EZ 2725-0019-0711-03 / 07296700	22.06.2006	BL20-2DO-R-NC Layout
EZ 2725-0020-0711-04 / 07296800	06.06.2006	BL20-2DO-R-NO Layout
EZ 2725-0021-0711-04 / 07299200	07.06.2006	BL20-2DO-R-CO Layout
GZ 2725-0019-0710-01 / 12394200	B	BL20-2DO-R-NC Placement
GZ 2725-0020-0710-01 / 12394300	C	BL20-2DO-R-NO Placement
GZ 2725-0021-0710-01 / 12396700	B	BL20-2DO-R-CO Placement
ZS 2725-0019-0710-01 / 12394200	C	BL20-2DO-R-NC Schematic
ZS 2725-0020-0710-01 / 12394300	C	BL20-2DO-R-NO Schematic
ZS 2725-0021-0710-01 / 12396700	C	BL20-2DO-R-CO Schematic
337897	02	Gateway Lower part
338856	01	Gateway Upper part
430095	5	Gateway Locking Assy
430050	4	Gateway Cover
329434	04	Locking Foot
441532	02	Moulding Set
341525	03	Moulding Cover
229430	07	Electronic Moulding
329431	07	Moulding Cover
330094	3	Base Module
331333	3	Base Module
tmex 0049	02.01.2008	Approval Label
2256460000	-	End Bracket
338003	2	End Plate
BL20 installation instructions ATEX IEC	1	BL20 – MODULAR I/O BUS- TERMINAL SYSTEM - IN ZONE 2

THIS CERTIFICATE MAY ONLY BE REPRODUCED IN ITS ENTIRETY AND WITHOUT CHANGE

FM Approvals Ltd. 1 Windsor Dials, Windsor, Berkshire, UK. SL4 1RS
T: +44 (0) 1753 750 000 F: +44 (0) 1753 868 700 E-mail: atex@fmapprovals.com www.fmglobal.com

ATEX IEC Rev.1.doc

BL20 – MODULAR I/O BUS- TERMINAL SYSTEM - IN ZONE 2

Installation instructions to use approved BL20 devices of category 3 in zone 2 according to directive 94/9/EG respective the standards IEC/ EN 60079-15:2006.

Ex-Marking

Label Material 7815 of 3M. Label Material 7815 CSA accepted (File 99316). See the CSA listings for details.

Manufacturer and address country	TURCK D-45466 Mülheim an der Ruhr Made in Germany
Type	Type label, other side of module
Type of protection	Ex nA nC II T4 respective Ex nA II T4
Approval number	FM 07 ATEX 0040 X IECEx FME 07.0004 X
Ex symbol and ATEX identifier	Ex II 3 G
Allowed ambient temperature	0°C ... +55°C
CE symbol with PTB No. as supervising notified body of manufacturing control	CE 0102
Serial no. production year (it's a code no.)	Type label, other side of module

Instructions for safe use in zone 2

BL20 devices of category 3 have to be installed in a suitable housing according IEC/ EN 60079-15 in such way, that a degree of protection of at least IP 54 according EN 60529 is reached.

Using switches e.g. at front side of the gateway as well as the connecting and disconnecting of any circuits is only permitted if no explosion hazardous atmosphere exists.

BL20 devices are to keep under normal operation conditions. The limits of the data sheets have to be observed.

The UL connector of the gateway supplies all field devices up to 30V d.c. and 10A d.c.. To supply more modules additional Power feeding modules BL20-PF-24VDC-D resp. Bus refreshing modules BL20-BR-24VDC-D may be necessary.

The Usys connector of the gateway feeds an internal supply circuit of the gateway and that provides "5V" module bus supply up to 1.5A d.c for gateway and modules. To supply more modules additional Bus refreshing modules BL20-BR-24VDC-D may be necessary. The rated current consumption of the module bus shows a table in BL20 catalogue.

Terminal blocks shall be installed on an EN 50 022 NS35 rail with each group completed by an end plate (Type BL20-ABPL, Ident-no. 6827123) and sandwiched between two end brackets (Type BL20-WEW-35/2-SW, Ident-no. 6827124).

The mounting rails used for BL20 should be mounted onto a galvanized mounting plate with a minimum thickness of 2 mm. This allows a reference potential for protective earth (PE) and functional earth that has to be created. Please allow for a maximum distance of 150 mm between mounting holes, when mounting non pre-drilled mounting rails.

If flexible wire should be used for wiring it is necessary that the endings must have wire end ferrules.

The devices are maintenance-free. A dry cleaning is acceptable. Repairs have to be done by manufacturer.

Declaration of Conformity/ Konformitätserklärung

Konformitätserklärung Nr. 3245 M
Declaration of Conformity

Diese Konformitätserklärung entspricht der Europäischen Norm EN 45014 "Allgemeine Kriterien für Konformitätserklärungen von Anbietern". Die Grundlage der Kriterien sind internationale Dokumente, insbesondere ISO/IEC Leitfaden 22, 1982: "Information on manufacturer's declaration of conformity with standards or other technical specifications".

This "Declaration of Conformity" complies with the European Standard EN 45014 "General criteria for a supplier's declaration of conformity". These criteria are based on the relevant international documentation, particularly the ISO/IEC Guide 22, 1982: "Information on the manufacturer's declaration of conformity with standards or other technical specifications".

Wir/ We HANS TURCK GMBH & CO KG
WITZLEBENSTR. 7, D - 45472 MÜLHEIM A.D. RUHR

erklären in alleiniger Verantwortung, dass die Produkte
declare under our sole responsibility that the products

BL20 modulares I/O Bus- Klemmen- System
Gelistete Module siehe Baumusterprüfbescheinigung FM 07 ATEX 0040 X
Listed modules see Type Examination Certificate FM 07 ATEX 0040 X

auf die sich die Erklärung bezieht, mit den folgenden Normen übereinstimmen
to which this declaration relates are in conformity with the following standards

EN 61326-1:2006

und wo anwendbar
and where applicable

EN 60079-0:2006 EN 60079-15:2005

Gemäß den Bestimmungen der Richtlinie (falls zutreffend)
Following the provisions of Directive (if applicable)

EMV - Richtlinie	/ EMC Directive	2004 / 108 / EG	15. Dez. 2004
Richtlinie ATEX	/ Directive ATEX	94 / 9 / EG	23. März 1994

Weitere Normen
additional standards

Aussteller der EG-Baumusterbescheinigung:
FM Approvals Ltd. 1 Windsor Dials
Windsor, Berkshire, UK. SL4 1 RS
Baumusterprüfbescheinigung FM 07 ATEX 0040 X

Kennzeichnung: Ex II 3 G

Mülheim, den 23.01.08 i.V. (i.V. W. Stoll)

Ort und Datum der Austellung / Place and date of issue

Name und Unterschrift des Befugten / Name and signature of authorized person

7_3f12a.doc Stand: 001 vom 01.08.06

Zertifikate für Europa

Baumusterprüfbescheinigung

1 **Baumusterprüfbescheinigung**

2 **Geräte und Schutzsysteme zur bestimmungsgemäßen Verwendung in explosionsgefährdeten Bereichen – Richtlinie 94/9/EG**

3 Baumusterprüfbescheinigungsnummer: **FM07ATEX0040X**

4 Gerät: (Baumusterbezeichnung und Name) **BL20 Modulares I/O Bus Klemmen System**

5 Hersteller: **Hans Turck GmbH & Co KG**

6 Anschrift: **Witzlebenstrasse 7**
DE 45472 Mülheim an der Ruhr
GERMANY

7 Die Bauart dieses Gerätes sowie die verschiedenen zulässigen Ausführungen sind in der Anlage zu dieser Baumusterprüfbescheinigung festgelegt.

8 FM Approvals Ltd. bescheinigt, dass das Gerät die grundlegenden Sicherheits- und Gesundheitsanforderungen für die Konzeption und den Bau von Geräten und Schutzsystemen zur bestimmungsgemäßen Verwendung in explosionsgefährdeten Bereichen gemäß Anhang II der Richtlinie erfüllt.
Die Ergebnisse der Prüfung sind im vertraulichen Prüfbericht Nr. 3030839EC vom 21 Januar, 2008 festgehalten.

9 Die grundlegenden Sicherheits- und Gesundheitsanforderungen, mit Ausnahme der in Punkt 15 der Anlage zu dieser Bescheinigung genannten, werden erfüllt durch Übereinstimmung mit: EN 60079-0:2006 und EN 60079-15:2005

10 Falls das Zeichen „X" hinter der Bescheinigungsnummer steht, wird in der Anlage zu dieser Bescheinigung auf besondere Bedingungen für die sichere Anwendung des Gerätes hingewiesen.

11 Diese Baumusterprüfbescheinigung bezieht sich nur auf die Konzeption und Prüfung des festgelegten Gerätes gemäß Richtlinie 94/9/EG. Weitere Anforderungen dieser Richtlinie gelten für die Herstellung und das Inverkehrbringen dieses Gerätes. Diese Anforderungen werden nicht durch diese Bescheinigung abgedeckt.

12 Die Kennzeichnung des Gerätes muss die folgenden Angaben enthalten:

II 3 G Ex nA II T4 Ta = 0°C to +55°C

II 3 G Ex nA nC II T4 Ta = 0°C to +55°C (Nur Relaismodule)

Andrew Was
Generaldirektor, FM Approvals Ltd.

Ausstellungsdatum: 21 Januar 2008

Diese Baumusterprüfbescheinigung darf nur unverändert weiterverbreitet werden.

„Dieses dokument ist eine Übersetzung, im Zweifelsfall gilt der englishe Originaltext"

FM Approvals Ltd. 1 Windsor Dials, Windsor, Berkshire, UK. SL4 1 RS
T: +44 (0) 1753 750 000 F: +44 (0) 1753 868 700 E-Mail: atex@fmapprovals.com www.fmglobal.com

FM F ATEX 029 (Feb/07) Seite 1 von 6

Anlage

FM Approvals
Member of the FM Global Group

zur Baumusterprüfbescheinigung FM07ATEX0040X

13 **Beschreibung des Gerätes:**

Das BL20 I/O Bus Klemmen System ist modular und kommuniziert über Gateways mit Bus Systemen wie PROFIBUS, DeviceNetT und CanOpen. Verschiedene digitale und analoge I/O Module stehen für Verbindungen zu nicht näher spezifizierten Feldgeräten zur Verfügung. Zusätzlich zu den analogen und digitalen Modulen gibt es einige spezielle Module, wie Zähler oder RS232 Interface und Relaisausgänge. Die Module stecken in Basiseinheiten, die der Montage und der elektrischen Versorgung und Busanbindung zu den Versorgungsmodulen und Gateways dienen. Der Bus hat eine obere Versorgungsgrenze, die durch zusätzlich dazwischen liegende Versorgungsmodule erweitert werden kann. Anwenderseitige Verbindungen erfolgen nur zu den Gateways und zu den Signalanschlüssen der einzelnen Module.

BL20 Modulares I/O Bus Klemmen System

Module	Beschreibung
BL20-2DI-24VDC-P	2 channel digital input modules – pnp
BL20-2DI-24VDC-N	2 channel digital input modules - npn
BL20-4DI-24VDC-P	4 channel digital input modules - pnp
BL20-4DI-24VDC-N	4 channel digital input modules - npn
BL20-4DI-NAMUR	4 channel digital input modules – NAMUR input
BL20-32DI-24VDC-P	32 channel digital input modules -pnp
BL20-2AI-I(0/4...20MA)	2 channel analogue input module – current
BL20-2AI-U(-10/0...+10VDC)	2 channel analogue input module – voltage
BL20-2AI-PT/NI-2/3	2 channel analogue input module – platinum and nickel resistance elements
BL20-2AI-THERMO-PI	2 channel analogue input module – thermoelements
BL20-4AI-U/I	4 channel analogue input module – current or voltage
BL20-2DO-24VDC-0,5A-P	2 channel digital output – 0.5A - pnp
BL20-2DO-24VDC-0,5A-N	2 channel digital output – 0.5A - npn
BL20-2DO-24VDC-2A-P	2 channel digital output – 2.0A - pnp
BL20-4DO-24VDC-0,5A-P	4 channel digital output – 0.5A - pnp
BL20-16DO-24VDC-0,5A-P	16 channel digital output – 0.5A - pnp
BL20-32DO-24VDC-0,5A-P	32 channel digital output – 0.5A - pnp
BL20-2AO-I(0/4...20MA)	2 channel analogue output module – current
BL20-2AO-U(-10/0...+10VDC)	2 channel analogue output module – voltage
BL20-1CNT-24VDC	Counter
BL20-1RS232	RS232 interface
BL20-1RS485/422	RS485/422 interface
BL20-1SSI	SSI interface
BL20-BR-24VDC-D	Power Supply Module with internal 5V DC Bus
BL20-PF-24VDC-D	Power Feed Module Field Supply 24V
BL20-E-8DI-24VDC-P	8 channel digital input module – pnp – Economy
BL20-E-16DI-24VDC-P	16 channel digital input module – pnp – Economy
BL20-E-8DO-24VDC-0,5A-P	8 channel digital output module – 0.5A – pnp – Economy
BL20-E-16DO-24VDC-0,5A-P	16 channel digital output module – 0.5A – pnp – Economy
BL20-GWBR-PBDP	Gateway for Profibus-DP with internal 5V DC Bus

Diese Baumusterprüfbescheinigung darf nur unverändert weiterverbreitet werden.

„Diese dokument ist eine Übersetzung, im Zweifelsfall gilt der englishe Originaltext"

FM Approvals Ltd. 1 Windsor Dials, Windsor, Berkshire, UK. SL4 1 RS
T: +44 (0) 1753 750 000 F: +44 (0) 1753 868 700 E-Mail: atex@fmapprovals.com www.fmglobal.com

Anlage

FM Approvals

zur Baumusterprüfbescheinigung FM07ATEX0040X

Module	Beschreibung
BL20-GW-DPV1	Gateway for Profibus-DPV1
BL20-GW-EN	Gateway for Modbus TCP
BL20-GW-EN-IP	Gateway for Ethernet IP
BL20-PG-EN-IP	Programmable Gateway for Ethernet IP
BL20-PG-EN	Programmable Gateway for Modbus TCP
BL20-GWBR-DNET	Gateway for DeviceNet with internal 5V DC Bus
BL20-GWBR-CANOPEN	Gateway for CANopen with internal 5V DC Bus
BL20-2RFID-A	2 Channel RFID module asynchronous
BL20-2RFID-C	2 Channel RFID module cyclic
BL20-2DO-R-NC	2 channel digital output – relay – normally closed
BL20-2DO-R-NO	2 channel digital output – relay – normally open
BL20-2DO-R-CO	2 channel digital output – relay – change over

14 **Besondere Bedingungen für die sichere Anwendung:**

1. *Zone 2 Installationen: Das BL20 - modulare I/O Bus- Klemmen- System soll in einem mit Werkzeug zu öffnenden Gehäuse montiert werden, dass den Anforderung der EN 60079-0 und EN 60079-15 entspricht und bei dem ein oder mehrere Zone 2 Verdrahtungsmethoden gemäß EN 60079-14 möglich sind. Bei Installationen im Freien oder an feuchten Orten, soll das Gehäuse mindestens IP54 Schutz bieten. Bei Installationen an Orten, die einen geeigneten Schutz gegen das Eindringen von Fremdkörpern oder Flüssigkeiten bieten, muss das Gehäuse mindestens IP4X Schutz erfüllen.*
2. *Die BL20 I/O Module werden auf einer EN 50 022 NS35 Tragschiene montiert, wobei jede Gruppe rechts mit einer Abschlussplatte (Typ BL20-ABPL, Ident-Nr. 6827123) und rechts und links mit Endwinkeln (Typ BL20-WEW-35/2-SW, Ident-Nr. 6827124) komplettiert wird.*
3. *Die Eingangsspannung der 2-kanaligen digitalen BL20 Relaismodule darf 30VAC oder DC nicht überschreiten (max. Kontaktspannung).*

15 **Grundlegende Sicherheits- und Gesundheitsanforderungen:**

Die nicht durch die in dieser Bescheinigung aufgelisteten Normen abgedeckten grundlegenden Sicherheits- und Gesundheitsanforderungen wurden im unter Punkt 8 genannten vertraulichen Bericht erfasst und bewertet.

16 **Prüf- und Bewertungsverfahren und Bedingungen:**

Diese Baumusterprüfbescheinigung ist das Ergebnis einer Prüfung eines entsprechend den Bestimmungen der geltenden Norm(en) eingereichten Produktmusters, sowie einer Auswertung weiterer Unterlagen. Dies bedeutet nicht, dass eine Bewertung der gesamten Produktion vorgenommen wurde.

Auch wenn diese Bescheinigung zur Unterstützung des Antrages eines Herstellers auf Erteilung des CE-Kennzeichens verwendet werden kann, übernimmt FM Approvals Ltd. keine Verantwortung dafür, dass dieses Gerät die Anforderungen aller geltenden Richtlinien für alle Anwendungen erfüllt.

Diese Bescheinigung wurde entsprechend dem FM Approvals Ltd. ATEX-Zertifizierungsverfahren ausgestellt.

Diese Baumusterprüfbescheinigung darf nur unverändert weiterverbreitet werden.

„Diese dokument ist eine Übersetzung, im Zweifelsfall gilt der englishe Originaltext"

FM Approvals Ltd. 1 Windsor Dials, Windsor, Berkshire, UK. SL4 1 RS
T: +44 (0) 1753 750 000 F: +44 (0) 1753 868 700 E-Mail: atex@fmapprovals.com www.fmglobal.com

TURCK Industrial Automation

Anlage

FM Approvals

zur Baumusterprüfbescheinigung FM07ATEX0040X

17 **Genehmigte Zeichnungen**

Zeichnung Nr.:	Rev.	Titel / Beschreibung
EZ 2725-0046-0711-04 / 07299300	30.06.2006	BL20-32DI-24VDC-P Layout
GZ 2725-0046-0710-01 / 12396800	D	BL20-32DI-24VDC-P Placement
ZS 2725-0046-0710-01 / 12396800	C	BL20-32DI-24VDC-P Schematic
EZ 2725-0068-0711-03 / 07257902	A	BL20-4DI-NAMUR Layout
GZ 2725-0068-0710-01 / 12349700	B	BL20-4DI-NAMUR Placement
ZS 2725-0068-0710-01 / 12349700	A	BL20-4DI-NAMUR Schematic
EZ 2725-0015-0711-03 / 07296400	06.06.2006	BL20-2DI-24VDC-P Layout
12393900	17.08.06	BL20-4DI-24VDC-P Placement
ZS 2725-0015-0710-01 / 12393900	C	BL20-2DI-24VDC-P Schematic
EZ 2725-0034-0711-03 / 07297300	22.06.2006	BL20-2DI-24VDC-N Layout
GZ 2725-0034-0710-01 / 12394800	c	BL20-2DI-24VDC-N Placement
ZS 2725-0034-0710-01 / 12394800	c	BL20-2DI-24VDC-N Schematic
EZ 2725-0038-0711-04 / 07297600	30.08.2006	XN-2AI-PT/NI-2/3 Layout
GZ 2725-0038-0710-01 / 12395100	c	XN-2AI-PT/NI-2/3 Placement
ZS 2725-0038-0710-01 / 12395100	D	XN-2AI-PT/NI-2/3 Schematic
EZ 2725-0039-0711-04 / 07297700	04.09.2006	XN-2AI-THERMO-PI Layout
GZ 2725-0039-0710-01 / 12395200	F	XN-2AI-THERMO-PI Placement
ZS 2725-0039-0710-01 / 12395200	D	XN-2AI-THERMO-PI Schematic
EZ 2725-0069-0711-03 / 07299800	06.07.2006	BL20-4AI-U/I Layout
GZ 2725-0069-0710-01 / 12397300	B	BL20-4AI-U/I Placement
ZS 2725-0069-0710-01 / 12397300	c	BL20-4AI-U/I Schematic
EZ 2725-0048-0711-04 / 07298200	07.06.2006	BL20-2AI-I(0/4...20mA) Layout
GZ 2725-0048-0710-01 / 12395700	D	BL20-2AI-I(0/4...20mA) Placement
ZS 2725-0048-0710-01 / 12395700	H	BL20-2AI-I(0/4...20mA) Schematic
EZ 2725-0047-0711-04 / 07298100	06.06.2006	BL20-4DO-24VDC-0.5A-P Layout
GZ 2725-0047-0710-01 / 12395600	C	BL20-4DO-24VDC-0.5A-P Placement
ZS 2725-0047-0710-01 / 12395600	D	BL20-4DO-24VDC-0.5A-P Schematic
EZ 2725-0017-0711-03 / 07296500	07.06.2006	BL20-2DO-24VDC-0.5A-P Layout
GZ 2725-0017-0710-01 / 12394000	A	BL20-2DO-24VDC-0.5A-P Placement
ZS 2725-0017-0710-01 / 12394000	B	BL20-2DO-24VDC-0.5A-P Schematic
EZ 2725-0036-0711-03 / 07297400	23.06.2006	BL20-2DO-24VDC-05A-N Layout
GZ 2725-0036-0710-01 / 12394900	D	BL20-2DO-24VDC-05A-N Placement
ZS 2725-0036-0710-01 / 12394900	E	BL20-2DO-24VDC-05A-N Schematic
EZ 2725-0018-0711-03 / 07296600	07.06.2006	BL20-2DO-24VDC-2A-P Layout
GZ 2725-0018-0710-01 / 12394100	A	BL20-2DO-24VDC-2A-P Placement
ZS 2725-0018-0710-01 / 12394100	B	BL20-2DO-24VDC-2A-P Schematic
EZ 2725-0063-0711-04 / 07299700	06.06.2006	BL20-32DO-24VDC-0.5A-P Layout

Diese Baumusterprüfbescheinigung darf nur unverändert weiterverbreitet werden.

„Diese dokument ist eine Übersetzung, im Zweifelsfall gilt der englishe Originaltext"

FM Approvals Ltd. 1 Windsor Dials, Windsor, Berkshire, UK. SL4 1 RS
T: +44 (0) 1753 750 000 F: +44 (0) 1753 868 700 E-Mail: atex@fmapprovals.com www.fmglobal.com

Anlage

FM Approvals
Member of the FM Global Group

zur Baumusterprüfbescheinigung FM07ATEX0040X

Zeichnung Nr.:	Rev.	Titel / Beschreibung
GZ 2725-0063-0710-01 / 12397200	D	BL20-32DO-24VDC-0.5A-P Placement
ZS 2725-0063-0710-01 / 12397200	E	BL20-32DO-24VDC-0.5A-P Schematic
EZ 2725-0025-0711-02 / 07297100	07.06.2006	BL20-2AO-U(-10/0...+10VDC) Layout
GZ 2725-0025-0710-01 / 12394600	A	BL20-2AO-U(-10/0...+10VDC) Placement
ZS 2725-0025-0710-01 / 12394600	B	BL20-2AO-U(-10/0...+10VDC) Schematic
EZ 2725-0050-0711-04 / 07298300	A	BL20-2AO-I(0/4...20mA) Layout
GZ 2725-0050-0710-01 / 12395800	D	BL20-2AO-I(0/4...20mA) Placement
ZS 2725-0050-0710-01 / 12395800	D	BL20-2AO-I(0/4...20mA) Schematic
EZ 2725-0043-0711-04 / 07297900	30.06.2006	BL20-1CNT-24VDC Layout
GZ 2725-0043-0710-01 / 12395400	G	BL20-1CNT-24VDC Placement
ZS 2725-0043-0710-01 / 12395400	G	BL20-1CNT-24VDC Schematic
EZ 2725-0058-0711-03 / 07299500	03.07.2006	BL20-1RS232 Layout
AWA 2725-0058-0710-01/07600020	24.08.04	XN-RS232 Modification
GZ 2725-0058-0710-01 / 12397000	B	BL20-1RS232 Placement
ZS 2725-0058-0710-01 / 12397000	C	BL20-1RS232 Schematic
EZ 2725-0026-0711-02 / 07297200	06.06.2006	BL20-BR-24VDC-D Layout
GZ 2725-0026-0710-01 / 12394700	A	BL20-BR-24VDC-D Placement
ZS 2725-0026-0710-01 / 12394700	B	BL20-BR-24VDC-D Schematic
EZ 2725-0073-0711-04 / 07299900	06.06.2006	BL20-E-8DI-24VDC-P Layout
EZ 2725-0075-0711-04 / 07300100	07.06.2006	BL20-E-16DI-24VDC-P Layout
GZ 2725-0073-0710-01 / 12397400	C	BL20-E-8DI-24VDC-P Placement
GZ 2725-0075-0710-01 / 12397600	C	BL20-E-16DI-24VDC-P Placement
ZS 2725-0073-0710-01 / 12397400	C	BL20-E-8DI-24VDC-P Schematic
ZS 2725-0075-0710-01 / 12397600	C	BL20-E-16DI-24VDC-P Schematic
EZ 2725-0074-0711-05 / 07300000	06.06.2006	BL20-E-8DO-24VDC-0.5A-P Layout
EZ 2725-0076-0711-03 / 07300200	07.06.2006	BL20-E-16DO-24VDC-0.5A-P Layout
GZ 2725-0074-0710-01 / 12397500	c	BL20-E-8DO-24VDC-0.5A-P Placement
GZ 2725-0076-0710-01 / 12397700	B	BL20-E-16DO-24VDC-0.5A-P Placement
ZS 2725-0074-0710-01 / 12397500	c	BL20-E-8DO-24VDC-0.5A-P Schematic
ZS 2725-0076-0710-01 / 12397700	B	BL20-E-16DO-24VDC-0.5A-P Schematic
EZ 2725-0061-0711-06 / 07300500	A	BL20-GWBR-CANopen Layout
EZ 2725-0061-0721-02 / 07300900	A	BL20-GWBR-CANopen CPU Layout
GZ 2725-0061-0710-01 / 12398000	E	BL20-GWBR-CANopen Placement
GZ 2725-0061-0720-01 / 12398400	B	BL20-GWBR-CANopen CPU Placement
ZS 2725-0061-0710-01 / 12398000	B	BL20-GWBR-CANopen Schematic
ZS 2725-0061-0720-01 / 12398400	B	BL20-GWBR-CANopen CPU Schematic
EZ 2725-0081-0711-02 / 07286801	A	BL20-GW-DPV1(BASIS) Layout
EZ 2725-0081-0721-02 / 07286901	A	BL20-GW-DPV1(CPU) Layout
GZ 2725-0081-0710-01 / 12383800	22.11.2005	BL20-GW-DPV1 Placement

Diese Baumusterprüfbescheinigung darf nur unverändert weiterverbreitet werden.

„Diese dokument ist eine Übersetzung, im Zweifelsfall gilt der englishe Originaltext"

FM Approvals Ltd. 1 Windsor Dials, Windsor, Berkshire, UK. SL4 1 RS
T: +44 (0) 1753 750 000 F: +44 (0) 1753 868 700 E-Mail: atex@fmapprovals.com www.fmglobal.com

TURCK Industrial Automation

FM Approvals

Anlage

zur Baumusterprüfbescheinigung FM07ATEX0040X

Zeichnung Nr.:	Rev.	Titel / Beschreibung
GZ 2725-0081-0720-01 / 12383900	18.11.2005	BL20-GW-DPV1 Placement
ZS 2725-0081-0710-01 / 12383800	22.11.2005	BL20-GW-DPV1 Schematic
ZS 2725-0081-0720-01 / 12383900	18.11.2005	BL20-GW-DPV1 Schematic
EZ 2725-0082-0721-01 / 07289500	A	BL20-GW-EN Layout
EZ 2725-0082-0711-01 / 07289600	A	BL20-GW-EN Layout
GZ 2725-0082-0720-01 / 12386300	20.12.2005	BL20-GW-EN Placement
GZ 2725-0082-0710-01 / 12386400	23.12.2005	BL20-GW-EN Placement
ZS 2725-0082-0720-01 / 12386300	20.12.2005	BL20-GW-EN Schematic
ZS 2725-0082-0710-01 / 12386400	23.12.2005	BL20-GW-EN Schematic
EZ 2725-0077-0711-01 / 07279300	A	BL20-2RFID-A Layout
GZ 2725-0077-0710-01 / 12374300	02.11.2005	BL20-2RFID Placement
ZS 2725-0077-0710-01 / 12374300	01.06.2006	BL20-2RFID Schematic
EZ 2725-0019-0711-03 / 07296700	22.06.2006	BL20-2DO-R-NC Layout
EZ 2725-0020-0711-04 / 07296800	06.06.2006	BL20-2DO-R-NO Layout
EZ 2725-0021-0711-04 / 07299200	07.06.2006	BL20-2DO-R-CO Layout
GZ 2725-0019-0710-01 / 12394200	B	BL20-2DO-R-NC Placement
GZ 2725-0020-0710-01 / 12394300	C	BL20-2DO-R-NO Placement
GZ 2725-0021-0710-01 / 12396700	B	BL20-2DO-R-CO Placement
ZS 2725-0019-0710-01 / 12394200	C	BL20-2DO-R-NC Schematic
ZS 2725-0020-0710-01 / 12394300	C	BL20-2DO-R-NO Schematic
ZS 2725-0021-0710-01 / 12396700	C	BL20-2DO-R-CO Schematic
337897	02	Gateway Lower part
338856	01	Gateway Upper part
430095	5	Gateway Locking Assy
430050	4	Gateway Cover
329434	04	Locking Foot
441532	02	Moulding Set
341525	03	Moulding Cover
229430	07	Electronic Moulding
329431	07	Moulding Cover
330094	3	Base Module
331333	3	Base Module
tmex 0049	02.01.2008	Approval Label
2256460000	-	End Bracket
338003	2	End Plate
BL20 installation instructions ATEX IEC	1	BL20 – MODULAR I/O BUS- TERMINAL SYSTEM - IN ZONE 2

Diese Baumusterprüfbescheinigung darf nur unverändert weiterverbreitet werden.

„Diese dokument ist eine Übersetzung, im Zweifelsfall gilt der englishe Originaltext"

FM Approvals Ltd. 1 Windsor Dials, Windsor, Berkshire, UK. SL4 1 RS
T: +44 (0) 1753 750 000 F: +44 (0) 1753 868 700 E-Mail: atex@fmapprovals.com www.fmglobal.com

FM F ATEX 029 (Feb/07) Seite 6 von 6

ATEX IEC Rev.1.doc

BL20 – MODULAR I/O BUS- KLEMMEN SYSTEM - IN ZONE 2

Betriebsanleitung für den Gebrauch zugelassener BL20 Geräte der Kategorie 3 in der Zone 2 entsprechend der Richtlinie 94/9/EG bzw. der Normen IEC/ EN 60079-15:2006.

Ex-Kennzeichnung

Typenschildmaterial von 3M 7815 CSA anerkannt (Datei 99316). Details siehe CSA Liste.

Hersteller und Adresse Land	TURCK D-45466 Mülheim an der Ruhr Made in Germany
Typ	Typenschild, siehe andere Modulseite
Zündschutzart	Ex nA nC II T4 bzw. Ex nA II T4
Zulassungsnummer	FM 07 ATEX 0040 X IECEx FME 07.0004 X
Ex Symbol und ATEX Bezeichner	Ex II 3 G
Zulässige Umgebungstemperatur	0°C ... +55°C
CE Symbol mit PTB Nr. als Hersteller-kontrolleur	CE 0102
Seriennr. Produktionsjahr (als Kodenummer)	Typenschild, siehe andere Modulseite

Anweisungen für den sicheren Gebrauch in der Zone 2

BL20 Geräte der Kategorie 3 müssen in einem passenden Gehäuse gemäß IEC/ EN 60079-15 eingebaut werden. Dabei ist mindestens die Schutzart IP 54 nach EN 60529 einzuhalten.

Das Bedienen der Schalter z.B. an der Frontseite des Gateways, sowie der Verbinden und Trennen von irgendeinem Stromkreis ist nur zulässig, wenn keine explosionsgefährliche Atmosphäre vorhanden ist.

BL20 Geräte müssen innerhalb normaler Bedingungen betrieben werden. Die Grenzen der Datenblätter sind zu beachten.

Über den UL Anschluss des Gateways werden alle Feldgeräte bis zu 30V DC und 10A DC versorgt. Um mehr Module zu versorgen sind zusätzliche Power-Feeding-Module BL20-PF-24VDC-D bzw. Bus-Refreshing-Module BL20-BR-24VDC-D erforderlich.

Der Usys Anschluss des Gateways versorgt die interne Elektronik des Gateways und liefert die „5V" Modulbus Versorgung bis 1,5A für Gateway und die angefügten Module. Um mehr Module zu versorgen sind zusätzliche Power-Feeding-Module BL20-PF-24VDC-D erforderlich. Die Nennstromaufnahmen der Module stehen in einer Tabelle im BL20 Katalog.

Endwinkel müssen auf den Tragschienen EN 50022 NS35 geschraubt werden. Jede Gruppe wird rechts mit einer Abschlussplatte (Typ BL20-ABPL, Ident-Nr. 6827123) versehen und ist festgesetzt zwischen zwei Endwinkel (Typ BL20-WEW-35/2-SW, Ident-Nr. 6827124).

Die für BL20 verwendete Tragschiene sollte auf einem leitenden Montageblech mit einer Dicke von mindestens 2 mm montiert werden. Damit ist ein Bezugspotenzial für Schutz- und Funktionserde herstellbar. Bei nicht vorgebohrten Tragschienen achten Sie bitte auf einen Lochabstand von max. 150 mm.

Wenn zur Verdrahtung feindrähtige Adern verarbeitet werden, dann ist es erforderlich die abisolierten Leitungsenden mit Aderendhülsen zu verpressen.

Die Geräte sind wartungsfrei. Eine trockene Reinigung ist zulässig. Reparaturen dürfen nur vom Hersteller durchgeführt werden.

TURCK Industrial Automation

Declaration of Conformity/Konformitätserklärung

TURCK Industrielle Automation

Konformitätserklärung **Nr. 3245 M**
Declaration of Conformity

Diese Konformitätserklärung entspricht der Europäischen Norm EN 45014 "Allgemeine Kriterien für Konformitätserklärungen von Anbietern". Die Grundlage der Kriterien sind internationale Dokumente, insbesondere ISO/IEC Leitfaden 22, 1982: "Information on manufacturer's declaration of conformity with standards or other technical specifications".

This "Declaration of Conformity" complies with the European Standard EN 45014 "General criteria for a supplier's declaration of conformity". These criteria are based on the relevant international documentation, particularly the ISO/IEC Guide 22, 1982: "Information on the manufacturer's declaration of conformity with standards or other technical specifications".

Wir/ We HANS TURCK GMBH & CO KG
WITZLEBENSTR. 7, D - 45472 MÜLHEIM A.D. RUHR

erklären in alleiniger Verantwortung, dass die Produkte
declare under our sole responsibility that the products

BL20 modulares I/O Bus- Klemmen- System
Gelistete Module siehe Baumusterprüfbescheinigung FM 07 ATEX 0040 X
Listed modules see Type Examination Certificate FM 07 ATEX 0040 X

auf die sich die Erklärung bezieht, mit den folgenden Normen übereinstimmen
to which this declaration relates are in conformity with the following standards

EN 61326-1:2006

und wo anwendbar
and where applicable

EN 60079-0:2006 EN 60079-15:2005

Gemäß den Bestimmungen der Richtlinie (falls zutreffend)
Following the provisions of Directive (if applicable)

EMV - Richtlinie	/ EMC Directive	2004 / 108 / EG	15. Dez. 2004
Richtlinie ATEX	/ Directive ATEX	94 / 9 / EG	23. März 1994

Weitere Normen
additional standards

Aussteller der EG-Baumusterbescheinigung:
FM Approvals Ltd. 1 Windsor Dials
Windsor, Berkshire, UK. SL4 1 RS
Baumusterprüfbescheinigung FM 07 ATEX 0040 X

Kennzeichnung: Ex II 3 G

Mülheim, den 23.01.08 i.V. (i.V. W. Stoll)

Ort und Datum der Austellung / Place and date of issue

Name und Unterschrift des Befugten / Name and signature of authorized person

7_3f12a.doc Stand: 001 vom 01.08.06

Certificates IECEx

IECEx Certificate of Conformity

IECEx Certificate of Conformity

INTERNATIONAL ELECTROTECHNICAL COMMISSION
IEC Certification Scheme for Explosive Atmospheres
for rules and details of the IECEx Scheme visit www.iecex.com

Certificate No.:	IECEx FME 07.0004X	issue No.:0	Certificate history:
Status:	**Current**		
Date of Issue:	**2008-01-21**	Page 1 of 5	
Applicant:	**Hans Turck GmbH & Co KG** Witzlebenstrasse 7 DE 45472 Mülheim an der Ruhr **Germany**		
Electrical Apparatus: *Optional accessory:*	**BL20 Modular I/O Bus Terminal System**		
Type of Protection:	**Type of protection 'n' electrical appartus**		
Marking:	**Ex nA II T4** **Ex nA nC II T4 (Relay Modules)**		

Approved for issue on behalf of the IECEx Certification Body: Andrew Was

Position: General Manager

Signature:
(for printed version)

Date: 21st January 2008

1. This certificate and schedule may only be reproduced in full.
2. This certificate is not transferable and remains the property of the issuing body.
3. The Status and authenticity of this certificate may be verified by visiting the Official IECEx Website.

Certificate issued by:

FM Approvals Ltd
1 Windsor Dials
SL4 1RS Windsor
United Kingdom

FM APPROVED

IECEx Certificate of Conformity

Certificate No.: IECEx FME 07.0004X

Date of Issue: **2008-01-21** Issue No.: **0**

Page 2 of 5

Manufacturer: **Werner Turck GmbH & Co KG**
Goethestrasse 7
DE 58553 Halver
Germany

Manufacturing location(s):

This certificate is issued as verification that a sample(s), representative of production, was assessed and tested and found to comply with the IEC Standard list below and that the manufacturer's quality system, relating to the Ex products covered by this certificate, was assessed and found to comply with the IECEx Quality system requirements. This certificate is granted subject to the conditions as set out in IECEx Scheme Rules, IECEx 02 and Operational Documents as amended.

STANDARDS:
The electrical apparatus and any acceptable variations to it specified in the schedule of this certificate and the identified documents, was found to comply with the following standards:

IEC 60079-0 : 2004 Edition: 4.0	Electrical apparatus for explosive gas atmospheres - Part 0: General requirements
IEC 60079-15 : 2005-03 Edition: Ed 3	Electrical apparatus for explosive gas atmospheres Part 15: Contruction, test and Marking of Type of Protection "n" electrical apparatus

*This Certificate **does not** indicate compliance with electrical safety and performance requirements other than those expressly included in the Standards listed above.*

TEST & ASSESSMENT REPORTS:
A sample(s) of the equipment listed has successfully met the examination and test requirements as recorded in

Test Report:

GB/FME/ExTR07.0002/00

Quality Assessment Report:
DE/PTB/QAR06.0012/00

IECEx Certificate of Conformity

Certificate No.: IECEx FME 07.0004X

Date of Issue: **2008-01-21** Issue No.: **0**

Page 3 of 5

Schedule

EQUIPMENT:
Equipment and systems covered by this certificate are as follows:

The BL20 I/O Bus-Terminal System is a modular system and offers gateways for communication with bus system such as PROFIBUS, DeviceNet™ and CanOpen. There are a number of I/O modules for both digital and analogue for connection to unspecified field devices. In addition to the analog and digital modules there are a number of modules for specific applications such as a counter or RS232 interfaces and for relay outputs. The modules plug in to bases which are used to mount the modules and which also carry the electrical power and signals via the bus to the Power Feed Modules and Gateway Modules. The bus has a maximum operational limit, but this can be increased by use of an intermediate power feed module. User connections are only made to the Gateway modules and to the signal terminals on the individual modules.

CONDITIONS OF CERTIFICATION: YES as shown below:

1. In Zone 2 installations, the BL20 – Modular I/O Bus-Terminal Systems shall be mounted within a tool-secured enclosure which meets the requirements of IEC 60079-0 and IEC 60079-15 and is capable of accepting one or more of the Zone 2 wiring methods specified in IEC 60079-14. Where installed in outdoor or potentially wet locations, the enclosure shall, at a minimum, meet the requirements of IP54. Where installed in locations providing adequate protection against the entry of solid foreign objects or water capable of impairing safety, the enclosure shall, at a minimum, meet the requirements of IP4X.
2 The BL20 I/O Modules shall be installed on an EN 50 022 NS35 rail with each group completed by an end plate (Type BL20-ABPL, Ident-no. 6827123) and sandwiched between two end brackets (Type BL20-WEW-35/2-SW, Ident-no. 6827124).
3. The input voltage for the BL20 2-channel digital relay module shall be limited to 30 Vac or dc (max. contact voltage).

IECEx Certificate of Conformity

Certificate No.: IECEx FME 07.0004X

Date of Issue: **2008-01-21** Issue No.: **0**

Page 4 of 5

EQUIPMENT(continued):

Module	Description
BL20-2DI-24VDC-P	2 channel digital input modules – pnp
BL20-2DI-24VDC-N	2 channel digital input modules - npn
BL20-4DI-24VDC-P	4 channel digital input modules - pnp
BL20-4DI-24VDC-N	4 channel digital input modules - npn
BL20-4DI-NAMUR	4 channel digital input modules – NAMUR input
BL20-32DI-24VDC-P	32 channel digital input modules -pnp
BL20-2AI-I(0/4...20MA)	2 channel analogue input module – current
BL20-2AI-U(-10/0...+10VDC)	2 channel analogue input module – voltage
BL20-2AI-PT/NI-2/3	2 channel analogue input module – platinum and nickel resistance elements
BL20-2AI-THERMO-PI	2 channel analogue input module – thermoelements
BL20-4AI-U/I	4 channel analogue input module – current or voltage
BL20-2DO-24VDC-0,5A-P	2 channel digital output – 0.5A - pnp
BL20-2DO-24VDC-0,5A-N	2 channel digital output – 0.5A - npn
BL20-2DO-24VDC-2A-P	2 channel digital output – 2.0A - pnp
BL20-4DO-24VDC-0,5A-P	4 channel digital output – 0.5A - pnp
BL20-16DO-24VDC-0,5A-P	16 channel digital output – 0.5A - pnp
BL20-32DO-24VDC-0,5A-P	32 channel digital output – 0.5A - pnp
BL20-2AO-I(0/4...20MA)	2 channel analogue output module – current
BL20-2AO-U(-10/0...+10VDC)	2 channel analogue output module – voltage
BL20-1CNT-24VDC	Counter
BL20-1RS232	RS232 interface
BL20-1RS485/422	RS485/422 interface
BL20-1SSI	SSI interface
BL20-BR-24VDC-D	Power Supply Module with internal 5V DC Bus
BL20-PF-24VDC-D	Power Feed Module Field Supply 24V
BL20-E-8DI-24VDC-P	8 channel digital input module – pnp – Economy

IECEx Certificate of Conformity

Certificate No.: IECEx FME 07.0004X

Date of Issue: **2008-01-21** Issue No.: **0**

Page 5 of 5

Additional information:

Module	Description
BL20-E-16DI-24VDC-P	16 channel digital input module – pnp – Economy
BL20-E-8DO-24VDC-0,5A-P	8 channel digital output module – 0.5A – pnp – Economy
BL20-E-16DO-24VDC-0,5A-P	16 channel digital output module – 0.5A – pnp – Economy
BL20-GWBR-PBDP	Gateway for Profibus-DP with internal 5V DC Bus
BL20-GW-DPV1	Gateway for Profibus-DPV1
BL20-GW-EN	Gateway for Modbus TCP
BL20-GW-EN-IP	Gateway for Ethernet IP
BL20-PG-EN-IP	Programmable Gateway for Ethernet IP
BL20-PG-EN	Programmable Gateway for Modbus TCP
BL20-GWBR-DNET	Gateway for DeviceNet with internal 5V DC Bus
BL20-GWBR-CANOPEN	Gateway for CANopen with internal 5V DC Bus
BL20-2RFID-A	2 Channel RFID module asynchronous
BL20-2RFID-C	2 Channel RFID module cyclic
BL20-2DO-R-NC	2 channel digital output – relay – normally closed
BL20-2DO-R-NO	2 channel digital output – relay – normally open
BL20-2DO-R-CO	2 channel digital output – relay – change over

TURCK
Industrial Automation

ATEX IEC Rev.1.doc

BL20 – MODULAR I/O BUS- TERMINAL SYSTEM - IN ZONE 2

Installation instructions to use approved BL20 devices of category 3 in zone 2 according to directive 94/9/EG respective the standards IEC/ EN 60079-15:2006.

Ex-Marking

Label Material 7815 of 3M. Label Material 7815 CSA accepted (File 99316). See the CSA listings for details.

Manufacturer and address country	TURCK D-45466 Mülheim an der Ruhr Made in Germany
Type	Type label, other side of module
Type of protection	Ex nA nC II T4 respective Ex nA II T4
Approval number	FM 07 ATEX 0040 X IECEx FME 07.0004 X
Ex symbol and ATEX identifier	Ex II 3 G
Allowed ambient temperature	0°C ... +55°C
CE symbol with PTB No. as supervising notified body of manufacturing control	CE 0102
Serial no. production year (it's a code no.)	Type label, other side of module

Instructions for safe use in zone 2

BL20 devices of category 3 have to be installed in a suitable housing according IEC/ EN 60079-15 in such way, that a degree of protection of at least IP 54 according EN 60529 is reached.

Using switches e.g. at front side of the gateway as well as the connecting and disconnecting of any circuits is only permitted if no explosion hazardous atmosphere exists.

BL20 devices are to keep under normal operation conditions. The limits of the data sheets have to be observed.

The UL connector of the gateway supplies all field devices up to 30V d.c. and 10A d.c.. To supply more modules additional Power feeding modules BL20-PF-24VDC-D resp. Bus refreshing modules BL20-BR-24VDC-D may be necessary.

The Usys connector of the gateway feeds an internal supply circuit of the gateway and that provides "5V" module bus supply up to 1.5A d.c for gateway and modules. To supply more modules additional Bus refreshing modules BL20-BR-24VDC-D may be necessary. The rated current consumption of the module bus shows a table in BL20 catalogue.

Terminal blocks shall be installed on an EN 50 022 NS35 rail with each group completed by an end plate (Type BL20-ABPL, Ident-no. 6827123) and sandwiched between two end brackets (Type BL20-WEW-35/2-SW, Ident-no. 6827124).

The mounting rails used for BL20 should be mounted onto a galvanized mounting plate with a minimum thickness of 2 mm. This allows a reference potential for protective earth (PE) and functional earth that has to be created. Please allow for a maximum distance of 150 mm between mounting holes, when mounting non pre-drilled mounting rails.

If flexible wire should be used for wiring it is necessary that the endings must have wire end ferrules.

The devices are maintenance-free. A dry cleaning is acceptable. Repairs have to be done by manufacturer.

Certificates for the USA

Certificate Of Compliance

FM Approvals
Member of the FM Global Group

FM Approvals
1151 Boston-Providence Turnpike
P.O. Box 9102 Norwood, MA 02062 USA
T: 781 762 4300 F: 781 762 9375 www.fmglobal.com

CERTIFICATE OF COMPLIANCE

HAZARDOUS (CLASSIFIED) LOCATION ELECTRICAL EQUIPMENT

This certificate is issued for the following equipment:

BL20 Modular I/O Bus Terminal System
NI / I / 2 / ABCD / T4 Ta = 0°C to +55°C
I / 2 / AEx nA IIC T4 Ta = 0°C to +55°C

Module	Description
BL20-2DI-24VDC-P	2 channel digital input modules – pnp
BL20-2DI-24VDC-N	2 channel digital input modules - npn
BL20-4DI-24VDC-P	4 channel digital input modules - pnp
BL20-4DI-24VDC-N	4 channel digital input modules - npn
BL20-4DI-NAMUR	4 channel digital input modules – NAMUR input
BL20-32DI-24VDC-P	32 channel digital input modules -pnp
BL20-2AI-I(0/4...20MA)	2 channel analogue input module – current
BL20-2AI-U(-10/0...+10VDC)	2 channel analogue input module – voltage
BL20-2AI-PT/NI-2/3	2 channel analogue input module – platinum and nickel resistance elements
BL20-2AI-THERMO-PI	2 channel analogue input module – thermoelements
BL20-4AI-U/I	4 channel analogue input module – current or voltage
BL20-2DO-24VDC-0,5A-P	2 channel digital output – 0.5A - pnp
BL20-2DO-24VDC-0,5A-N	2 channel digital output – 0.5A - npn
BL20-2DO-24VDC-2A-P	2 channel digital output – 2.0A - pnp
BL20-4DO-24VDC-0,5A-P	4 channel digital output – 0.5A - pnp
BL20-16DO-24VDC-0,5A-P	16 channel digital output – 0.5A - pnp
BL20-32DO-24VDC-0,5A-P	32 channel digital output – 0.5A - pnp
BL20-2AO-I(0/4...20MA)	2 channel analogue output module – current
BL20-2AO-U(-10/0...+10VDC)	2 channel analogue output module – voltage
BL20-1CNT-24VDC	Counter
BL20-1RS232	RS232 interface
BL20-1RS485/422	RS485/422 interface

6/07

3030839
Page 1 of 4

FM Approvals
Member of the FM Global Group

Module	Description
BL20-1SSI	SSI interface
BL20-BR-24VDC-D	Power Supply Module with internal 5V DC Bus
BL20-PF-24VDC-D	Power Feed Module Field Supply 24V
BL20-E-8DI-24VDC-P	8 channel digital input module – pnp – Economy
BL20-E-16DI-24VDC-P	16 channel digital input module – pnp – Economy
BL20-E-8DO-24VDC-0,5A-P	8 channel digital output module – 0.5A – pnp – Economy
BL20-E-16DO-24VDC-0,5A-P	16 channel digital output module – 0.5A – pnp – Economy
BL20-GWBR-PBDP	Gateway for Profibus-DP with internal 5V DC Bus
BL20-GW-DPV1	Gateway for Profibus-DPV1
BL20-GW-EN	Gateway for Modbus TCP
BL20-GW-EN-IP	Gateway for Ethernet IP
BL20-PG-EN-IP	Programmable Gateway for Ethernet IP
BL20-PG-EN	Programmable Gateway for Modbus TCP
BL20-GWBR-DNET	Gateway for DeviceNet with internal 5V DC Bus
BL20-GWBR-CANOPEN	Gateway for CANopen with internal 5V DC Bus
BL20-2RFID-A	2 Channel RFID module asynchronous
BL20-2RFID-C	2 Channel RFID module cyclic

Special Conditions of Use

1. In Class I, Division 2 installations, the BL20 – Modular I/O Bus-Terminal Systems shall be mounted within a tool-secured enclosure installed in accordance with the enclosure, mounting, spacing, and segregation requirements of the ultimate application which is capable of accepting one or more of the Class I, Division 2 wiring methods specified in the National Electrical Code ANSI/NFPA 70 Article 500.

2. In Class I, Zone 2 installations, the BL20 – Modular I/O Bus-Terminal Systems shall be mounted within a tool-secured enclosure which meets the requirements of ISA 60079-0 and ISA 60079-15 and is capable of accepting one or more of the Class I, Zone 2 wiring methods specified in the National Electrical Code ANSI/NFPA 70 Article 505. Where installed in outdoor or potentially wet locations, the enclosure shall, at a minimum, meet the requirements of IP54. Where installed in locations providing adequate protection against the entry of solid foreign objects or water capable of impairing safety, the enclosure shall, at a minimum, meet the requirements of IP4X.

3. The BL20 I/O Modules shall be installed on an EN 50 022 NS35 rail with each group completed by an end plate (Type BL20-ABPL, Ident-no. 6827123) and sandwiched between two end brackets (Type BL20-WEW-35/2-SW, Ident-no. 6827124).

BL20 Modular I/O Bus Terminal System
NI / I / 2 / ABCD / T4 Ta = 0°C to +55°C
I / 2 / AEx nA nC IIC T4 Ta = 0°C to +55°C

Module	Description
BL20-2DO-R-NC	2 channel digital output – relay – normally closed
BL20-2DO-R-NO	2 channel digital output – relay – normally open
BL20-2DO-R-CO	2 channel digital output – relay – change over

Special Conditions of Use

1. In Class I, Division 2 installations, the BL20 – Modular I/O Bus-Terminal Systems shall be mounted within a tool-secured enclosure installed in accordance with the enclosure, mounting, spacing, and segregation requirements of the ultimate application which is capable of accepting one or more of the Class I, Division 2 wiring methods specified in the National Electrical Code ANSI/NFPA 70 Article 500.

2. In Class I, Zone 2 installations, the BL20 – Modular I/O Bus-Terminal Systems shall be mounted within a tool-secured enclosure which meets the requirements of ISA 60079-0 and ISA 60079-15 and is

6/07

3030839
Page 2 of 4

FM Approvals

Member of the FM Global Group

capable of accepting one or more of the Class I, Zone 2 wiring methods specified in the National Electrical Code ANSI/NFPA 70 Article 505. Where installed in outdoor or potentially wet locations, the enclosure shall, at a minimum, meet the requirements of IP54. Where installed in locations providing adequate protection against the entry of solid foreign objects or water capable of impairing safety, the enclosure shall, at a minimum, meet the requirements of IP4X

3. The BL20 I/O Modules shall be installed on an EN 50 022 NS35 rail with each group completed by an end plate (Type BL20-ABPL, Ident-no. 6827123) and sandwiched between two end brackets (Type BL20-WEW-35/2-SW, Ident-no. 6827124).

4. The input voltage for the BL20 2-channel digital relay modules shall be limited to 30 Vac or dc. (max. contact voltage).

Equipment Ratings:

Nonincendive for Class I, Division 2, Groups A, B, C and D; Nonsparking Ex nA for Class I, Zone 2, Group IIC and Nonsparking and sealed, AEx nA nC for Class I, Zone 2, Group IIC; Hazardous (Classified) Locations Temperature Class T4 at an ambient of 0°C to +55°C.

FM Approved for:

Hans Turck GmbH & Co KG
Mülheim an der Ruhr, Germany

6/07

3030839
Page 3 of 4

FM Approvals
Member of the FM Global Group

This certifies that the equipment described has been found to comply with the following Approval Standards and other documents:

Class 3600	1998
Class 3611	2004
Class 3810	2005
ANSI/ISA 60079-15	2003

Original Project ID: 3030839 Approval Granted: November 26, 2007

Subsequent Revision Reports / Date Approval Amended

Report Number	Date	Report Number	Date
080116	February 22, 2008		

FM Approvals LLC

J. E. Marquedant
J. E. Marquedant
Group Manager, Electrical

22 February 2008
Date

6/07

3030839
Page 4 of 4

Installation Drawings

Installation drawing (US)

NON-HAZARDOUS LOCATION

Class I, Division 2
Class I, Zone 2

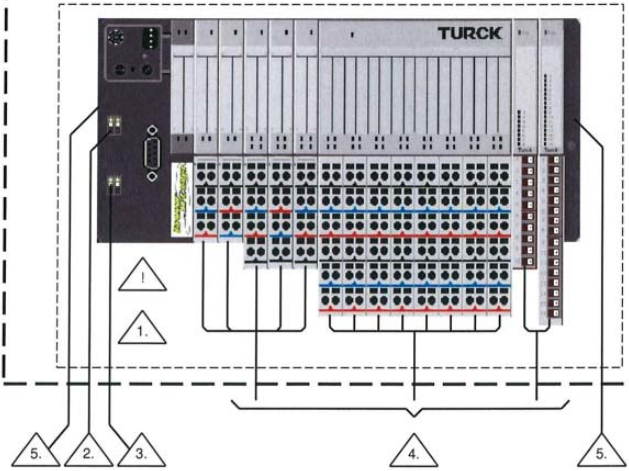

Class I, Division 2 – Installation drawing (US)
Class I, Zone 2 – Installation drawing (US)

! WARNING – EXPLOSION HAZARD – DO NOT OPERATE SWITCHES OR CONNECT OR DISCONNECT MODULES AND WIRING WHEN THE CIRCUIT IS ENERGIZED UNLESS THE AREA IS KNOWN TO BE NON-HAZARDOUS.

1. In Class I, Division 2 installations, the BL20 – Modular I/O Bus-Terminal Systems shall be mounted within a tool-secured enclosure installed in accordance with the enclosure, mounting, spacing, and segregation requirements of the ultimate application which is capable of accepting one or more of the Class I, Division 2 wiring methods specified in the National Electrical Code ANSI/NFPA 70 Article 500.

1. In Class I, Zone 2 installations, the BL20 – Modular I/O Bus-Terminal Systems shall be mounted within a tool-secured enclosure which meets the requirements of ISA 60079-0 and ISA 60079-15 and is capable of accepting one or more of the Class I, Zone 2 wiring methods specified in the National Electrical Code ANSI/NFPA 70 Article 505. Where installed in outdoor or potentially wet locations, the enclosure shall, at a minimum, meet the requirements of IP54. Where installed in dry indoor locations, the enclosure shall, at a minimum, meet the requirements of IP4X.

-	tmex0050	N.Sch.	2007-10-09	BL20 Installation drawing (US)	
Rev	DWG-No.	Draft	Date	Scale: NONE	Sheet 1 of 2

TURCK Industrial Automation

2. The UL connector supplies all field devices up to 30V d.c. and 10A d.c.. To supply more modules additional Power feeding modules BL20-PF-24VDC-D resp. Bus refreshing modules BL20-BR-24VDC-D may be necessary.

3. The Usys connector feeds an internal supply circuit of the gateway and that provides "5V" module bus supply up to 1.5A d.c for gateway and modules. To supply more modules additional Bus refreshing modules BL20-BR-24VDC-D may be necessary. The rated current consumption of the module bus shows a table in BL20 catalogue.

2. 4. Primary power and secondary wiring external to the enclosure shall be in accordance with Class I, Division 2 or Class I, Zone 2 wiring practices per the National Electrical Code ANSI/NFPA 70, Article 500 or Article 505 as appropriate.

5. Terminal blocks shall be installed on an EN 50022 NS35 rail with each group completed by an end plate (Type BL20-ABPL, Ident-no. 6827123) and sandwiched between two end brackets (Type BL20-WEW-35/2-SW, Ident-no. 6827124).

-	tmex0050	N.Sch.	2007-10-09	BL20 Installation drawing (US)	
Rev	DWG-No.	Draft	Date	Scale: NONE	Sheet 2 of 2

Certificates for Canada

Certificate Of Compliance

FM Approvals

Member of the FM Global Group

FM Approvals
1151 Boston-Providence Turnpike
P.O. Box 9102 Norwood, MA 02062 USA
T: **781 762 4300** F: 781 762 9375 www.fmglobal.com

CERTIFICATE OF COMPLIANCE

HAZARDOUS LOCATION ELECTRICAL EQUIPMENT
PER CANADIAN REQUIREMENTS

This certificate is issued for the following equipment:

BL20 Modular I/O Bus Terminal System
NI / I / 2 / ABCD / T4 Ta = 0°C to +55°C
I / 2 / Ex nA IIC T4 Ta = 0°C to +55°C

Module	Description
BL20-2DI-24VDC-P	2 channel digital input modules – pnp
BL20-2DI-24VDC-N	2 channel digital input modules - npn
BL20-4DI-24VDC-P	4 channel digital input modules - pnp
BL20-4DI-24VDC-N	4 channel digital input modules - npn
BL20-4DI-NAMUR	4 channel digital input modules – NAMUR input
BL20-32DI-24VDC-P	32 channel digital input modules -pnp
BL20-2AI-I(0/4...20MA)	2 channel analogue input module – current
BL20-2AI-U(-10/0...+10VDC)	2 channel analogue input module – voltage
BL20-2AI-PT/NI-2/3	2 channel analogue input module – platinum and nickel resistance elements
BL20-2AI-THERMO-PI	2 channel analogue input module – thermoelements
BL20-4AI-U/I	4 channel analogue input module – current or voltage
BL20-2DO-24VDC-0,5A-P	2 channel digital output – 0.5A - pnp
BL20-2DO-24VDC-0,5A-N	2 channel digital output – 0.5A - npn
BL20-2DO-24VDC-2A-P	2 channel digital output – 2.0A - pnp
BL20-4DO-24VDC-0,5A-P	4 channel digital output – 0.5A - pnp
BL20-16DO-24VDC-0,5A-P	16 channel digital output – 0.5A - pnp
BL20-32DO-24VDC-0,5A-P	32 channel digital output – 0.5A - pnp
BL20-2AO-I(0/4...20MA)	2 channel analogue output module – current
BL20-2AO-U(-10/0...+10VDC)	2 channel analogue output module – voltage
BL20-1CNT-24VDC	Counter

6/07

3030839C
Page 1 of 4

FM Approvals
Member of the FM Global Group

Module	Description
BL20-1RS232	RS232 interface
BL20-1RS485/422	RS485/422 interface
BL20-1SSI	SSI interface
BL20-BR-24VDC-D	Power Supply Module with internal 5V DC Bus
BL20-PF-24VDC-D	Power Feed Module Field Supply 24V
BL20-E-8DI-24VDC-P	8 channel digital input module – pnp – Economy
BL20-E-16DI-24VDC-P	16 channel digital input module – pnp – Economy
BL20-E-8DO-24VDC-0,5A-P	8 channel digital output module – 0.5A – pnp – Economy
BL20-E-16DO-24VDC-0,5A-P	16 channel digital output module – 0.5A – pnp – Economy
BL20-GWBR-PBDP	Gateway for Profibus-DP with internal 5V DC Bus
BL20-GW-DPV1	Gateway for Profibus-DPV1
BL20-GW-EN	Gateway for Modbus TCP
BL20-GW-EN-IP	Gateway for Ethernet IP
BL20-PG-EN-IP	Programmable Gateway for Ethernet IP
BL20-PG-EN	Programmable Gateway for Modbus TCP
BL20-GWBR-DNET	Gateway for DeviceNet with internal 5V DC Bus
BL20-GWBR-CANOPEN	Gateway for CANopen with internal 5V DC Bus
BL20-2RFID-A	2 Channel RFID module asynchronous
BL20-2RFID-C	2 Channel RFID module cyclic

Special Conditions of Use

1. In Class I, Division 2 installations, the BL20 – Modular I/O Bus-Terminal Systems shall be mounted within a tool-secured enclosure installed in accordance with the enclosure, mounting, spacing, and segregation requirements of the ultimate application which is capable of accepting one or more of the Class I, Division 2 wiring methods specified in the Canadian Electrical Code CSA C22.1.

2. In Class I, Zone 2 installations, the BL20 – Modular I/O Bus-Terminal Systems shall be mounted within a tool-secured enclosure which meet the requirements of CSA E60079-0 and CSA E60079-15 and is capable of accepting one or more of the Class I, Zone 2 wiring methods specified in the Canadian Electrical Code CSA C22.1. Where installed in outdoor or potentially wet locations, the enclosure shall, at a minimum, meet the requirements of IP54. Where installed in locations providing adequate protection against the entry of solid foreign objects or water capable of impairing safety, the enclosure shall, at a minimum, meet the requirements of IP4X.

3. The BL20 I/O Modules shall be installed on an EN 50 022 NS35 rail with each group completed by an end plate (Type BL20-ABPL, Ident-no. 6827123) and sandwiched between two end brackets (Type BL20-WEW-35/2-SW, Ident-no. 6827124).

BL20 Modular I/O Bus Terminal System
NI / I / 2 / ABCD / T4 Ta = 0°C to +55°C
I / 2 / Ex nA nC IIC T4 Ta = 0°C to +55°C

Module	Description
BL20-2DO-R-NC	2 channel digital output – relay – normally closed
BL20-2DO-R-NO	2 channel digital output – relay – normally open
BL20-2DO-R-CO	2 channel digital output – relay – change over

Special Conditions of Use

1. In Class I, Division 2 installations, the BL20 – Modular I/O Bus-Terminal Systems shall be mounted within a tool-secured enclosure installed in accordance with the enclosure, mounting, spacing, and segregation requirements of the ultimate application which is capable of accepting one or more of the Class I, Division 2 wiring methods specified in the Canadian Electrical Code CSA C22.1.

2. In Class I, Zone 2 installations, the BL20 – Modular I/O Bus-Terminal Systems shall be mounted

6/07

3030839C
Page 2 of 4

FM Approvals℠

Member of the FM Global Group

within a tool-secured enclosure which meet the requirements of CSA E60079-0 and CSA E60079-15 and is capable of accepting one or more of the Class I, Zone 2 wiring methods specified in the Canadian Electrical Code CSA C22.1. Where installed in outdoor or potentially wet locations, the enclosure shall, at a minimum, meet the requirements of IP54. Where installed in locations providing adequate protection against the entry of solid foreign objects or water capable of impairing safety, the enclosure shall, at a minimum, meet the requirements of IP4X.

3. The BL20 I/O Modules shall be installed on an EN 50 022 NS35 rail with each group completed by an end plate (Type BL20-ABPL, Ident-no. 6827123) and sandwiched between two end brackets (Type BL20-WEW-35/2-SW, Ident-no. 6827124).

4. The input voltage for the BL20 2-channel digital relay modules shall be limited to 30 Vac or dc. (max. contact voltage).

Equipment Ratings:

Nonincendive for Class I, Division 2, Groups A, B, C and D; Nonsparking Ex nA for Class I, Zone 2, Group IIC and Nonsparking and sealed, AEx nA nC for Class I, Zone 2, Group IIC; Hazardous (Classified) Locations Temperature Class T4 at an ambient of 0°C to +55°C.

FM Approved for:

Hans Turck GmbH & Co KG
Mülheim an der Ruhr, Germany

6/07

3030839C
Page 3 of 4

FM Approvals

Member of the FM Global Group

This certifies that the equipment described has been found to comply with the following Approval Standards and other documents:

CSA/C22.2 No 213	1992
CSA/C22.2 No 1010.1	2006
CAN/CSA-E60079-15:02	2002

Original Project ID: 3030839C

Approval Granted: November 26, 2007

Subsequent Revision Reports / Date Approval Amended

Report Number	Date	Report Number	Date
080116	February 22, 2008		

FM Approvals LLC

J. E. Marquedant
Group Manager, Electrical

22 February 2008
Date

6/07

3030839C
Page 4 of 4

Installation Drawings

Installation drawing (Canada)
Principe de montage (Canada)

NON-HAZARDOUS LOCATION – EMPLACEMENT NON DANGEREUX

Class I, Division 2 - Classe I, division 2
Class I, Zone 2 - Classe I, zone 2

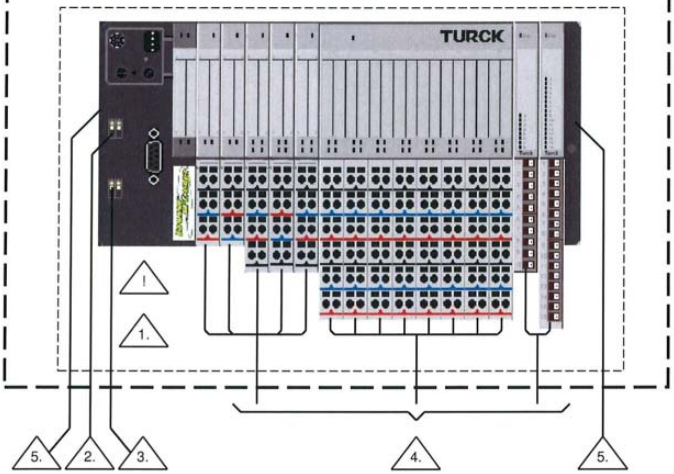

Class I, Division 2 – Installation drawing (Canada)
Classe I, division 2 – principe de montage (Canada)

Class I, Zone 2 – Installation drawing (Canada)
Classe I, zone 2 – principe de montage (Canada)

! WARNING – EXPLOSION HAZARD – DO NOT OPERATE SWITCHES OR CONNECT OR DISCONNECT MODULES AND WIRING WHEN THE CIRCUIT IS ENERGIZED UNLESS THE AREA IS KNOWN TO BE NON-HAZARDOUS.
ATTENTION – DANGER D'EXPLOSION – NE PAS FAIRE FONCTIONNER LES INTERRUPTEURS OU CONNECTER OU DECONNECTER LES MODULES ET LE CABLAGE SI LE CIRCUIT EST SOUS TENSION SAUF SI LA ZONE EST DECLAREE NON DANGEREUSE

-	tmex0051	N.Sch.	2007-10-09	BL20 Installation drawing (Canada)	
Rev	DWG-No.	Draft	Date	Scale: NONE	Sheet 1 of 2

TURCK
Industrial Automation

1. In Class I, Division 2 installations, the BL20 – Modular I/O Bus-Terminal Systems shall be mounted within a tool-secured enclosure installed in accordance with the enclosure, mounting, spacing, and segregation requirements of the ultimate application which is capable of accepting one or more of the Class I, Division 2 wiring methods specified in the Canadian Electrical Code CSA C22.1.
Dans la classe I, installations de la division 2, les systèmes de bornes de bus E/S modulaires BL20 sont à monter dans une armoire sécurisée installée conformément aux exigences d'armoire, de montage, d'espacement et de ségrégation de l'application respective qui doit être capable d'accepter une ou plusieurs méthodes de câblage de la classe I, division 2 comme spécifie le CSA C22.1 du "Canadian Electrical Code" (Norme de sécurité relative aux installations électriques au Canada).

1. In Class I, Zone 2 installations, the BL20 – Modular I/O Bus-Terminal Systems shall be mounted within a tool-secured enclosure which meets the requirements of ISA 60079-0 and ISA 60079-15 and is capable of accepting one or more of the Class I, Zone 2 wiring methods specified in the Canadian Electrical Code CSA C22.1. Where installed in outdoor or potentially wet locations, the enclosure shall, at a minimum, meet the requirements of IP54. Where installed in dry indoor locations, the enclosure shall, at a minimum, meet the requirements of IP4X.
Dans la classe I, installations de la zone 2, les systèmes de bornes de bus E/S modulaires BL20 sont à monter dans une armoire sécurisée remplissant les exigences des normes ISA 60079-0 et ISA 60079-15 et doit être capable d'accepter une ou plusieurs méthodes de câblage de la classe I, zone 2 comme spécifié dans le CSA C22.1 du "Canadian Electrical Code" (norme de sécurité relative aux installations électriques au Canada). En cas d'installation à l'extérieur ou dans des localisations potentiellement humides, l'armoire doit posséder au moins l'indice de protection IP54. En cas d'installation à l'intérieur, l'armoire doit au moins répondre aux exigences de l'indice de protection IP4X.

2. The UL connector supplies all field devices up to 30V d.c. and 10A d.c.. To supply more modules additional Power feeding modules BL20-PF-24VDC-D resp. Bus refreshing modules BL20-BR-24VDC-D may be necessary.
Le connecteur UL alimente tous les appareils de terrain jusqu'à 30 VDC et 10 A DC. Pour alimenter plus de modules, l'utilisation de modules d'alimentation additionnels BL20-PF-24VDC-D et resp. modules de rafraîchissement de bus BL20-BR-24VDC-D peut s'imposer.

3. The Usys connector feeds an internal supply circuit of the gateway and that provides "5V" module bus supply up to 1.5A d.c for gateway and modules. To supply more modules additional Bus refreshing modules BL20-BR-24VDC-D may be necessary. The rated current consumption of the module bus shows a table in BL20 catalogue.
Le connecteur Usys alimente un circuit d'alimentation interne de la passerelle et permet d'augmenter l'alimentation « 5V » du module de bus jusqu'à 1,5 A DC pour la passerelle et les modules. Pour alimenter plus de modules, l'utilisation du module rafraîchissement de bus BL20-BR-24VDC-D peut s'imposer. La consommation de courant nominale du module de bus figure au tableau du catalogue BL20.

2. 4. Primary power and secondary wiring external to the enclosure shall be in accordance with Class I, Division 2 or Class I, Zone 2 wiring practices per the Canadian Electrical Code CSA C22.1.
En premier lieu l'alimentation et en deuxième lieu le câblage externe à l'armoire doivent être conformes aux prescriptions de câblage de la classe I, division 2 ou de la classe I, zone 2 suivant le « Canadian Electrical Code CSA C22.1 (norme de sécurité relative aux installations électriques au Canada).

5. Terminal blocks shall be installed on an EN 50022 NS35 rail with each group completed by an end plate (Type BL20-ABPL, Ident-no. 6827123) and sandwiched between two end brackets (Type BL20-WEW-35/2-SW, Ident-no. 6827124).
Les borniers doivent être installés sur un rail EN 50022 NS35 dont chaque groupe est complété par une plaquette d'obturation (Type BL20-ABPL, No. d'identité 687123) et bloqué par deux équerres (Type BL20-WEW-35/2-SW, No. d'identité 6827124).

-	tmex0051	N.Sch.	2007-10-09	BL20 Installation drawing (Canada)	
Rev	DWG-No.	Draft	Date	Scale: NONE	Sheet 2 of 2

9 Apendix

Function Blocks for S7 2

Function Blocks for BL20-1RSxxx 2
– Transmit Function Block FBSENDRSxxx 3
– Receive Function Block FBRECVRSxxx 7
– Transmit and Receive Function Block FBSRRSxxx 11
Function block for BL20-1SSI 15

Parameter Gateway – Assignment in Hexadecimal Format 22

Parameter 4 22
Parameter 5 28

Conversion Table Decimal to Hexadecimal 34

BL20 Accessories 36

Function Blocks for S7

Function blocks are available for the data transfer between the technology modules and the Siemens PLC S7.

Function Blocks for BL20-1RSxxx

The function blocks FBSENDRSxxx, FBRECVRSxxx and FBSRRSxxx control the data transfer between the PLC and the BL20-1RSxxx module. The transmission is realized in 8 byte format, 2 bytes contain control data and 6 bytes contain user data.

The memory area for the transmit-data and the receive-data in the Siemens PLC S7 are not fixed and can be chosen by the user.

Depending on the PLC's performance, up to 65536 data bytes can be transmitted during one transmission cycle.

for the consistent data transfer, the system function blocks SFC14 and SFC15 from Siemens are used.

The transmission of the values is transparent. The meaning of the error numbers can be found in the manual for the control software from Siemens.

Transmit Function Block FBSENDRSxxx

The software block FBSENDRSxxx is a handling block only used to transmit data to the BL20-1RS232 module.

Figure 78: Transmit function block FBSENDRSxxx

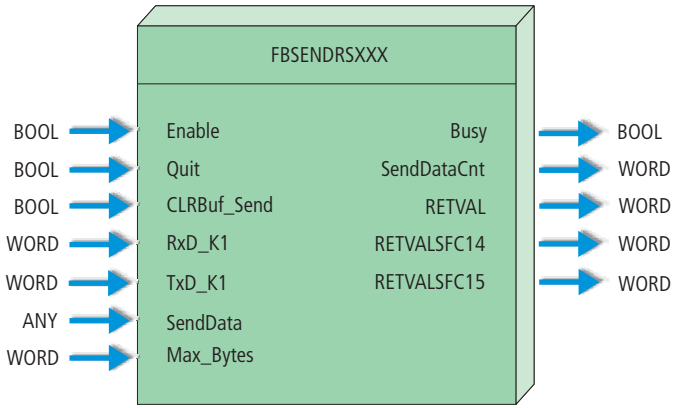

Input variables

Table 102: Input variables of FBSENDRSxxx

Variable	Meaning
Enable	1: The transmission of data is released. 0: The transmission of data is blocked.
Quit	1: The error messages are reset (Acknowledge of errors) The communication is stopped. 0: If error messages have occurred, they remain valid.
CLRBuf_Send	1: Flushing the transmit-buffer is planned. Flushing is always executed successfully, if: Enable = 0 and Quit = 1 0: No influence on the module's function.
RxD_K1	Start address of the module's 8-byte input address range. The software SIMATIC STEP 7 assigns the address ranges to the different modules. The „Hardware-Configuration“ of the software shows the address ranges chosen by the user. The addresses are set in the WORD format (2 Bytes). Example: The decimal number 258 has to be transmitted as the hexadecimal code W#16#102.

	TxD_K1	Start address of the module's 8-byte output address range. The software SIMATIC STEP 7 assigns the address ranges to the different modules. The „Hardware-Configuration“ of the software shows the address ranges chosen by the user. The addresses are set in the WORD format (2 Bytes). Example: The decimal number 258 has to be transmitted as the hexadecimal code W#16#102.
	SendData	Start address for storing the transmit-data. (inputs, outputs, flags, data blocks etc.).
	Max_Bytes	Maximum number of bytes that have to be sent (max. 65536 bytes).

Output variables

Table 103: Output variables of FBSENDRSxxx

Variable	Meaning
Busy	1: Data are actually transmitted. 0: No data transmitted at the moment.
SendDataCnt	Number of the transmitted data (max. 65536).
RETVAL	Return value of the function (status o error code) – 0 → no error – 8010h → communication error: hardware error – 8020h → communication error: error in data flow – 8040h → communication error: error in telegram frame – 8080h → communication error: buffer-overflow of the module – 8300h → variable error: wrong parameter „SendData“ – 8301h → variable error: wrong data type of parameter „SendData“ – 8302h → variable error: wrong length of parameter „SendData“
RETVALSFC14	see Siemens software manual
RETVALSFC15	see Siemens software manual

Receive Function Block FBRECVRSxxx

The software block FBRECVRSxxx is a handling block only used to receive data from the BL20-1RS232 module.

Figure 79: Receive function block FBRECVRSxxx

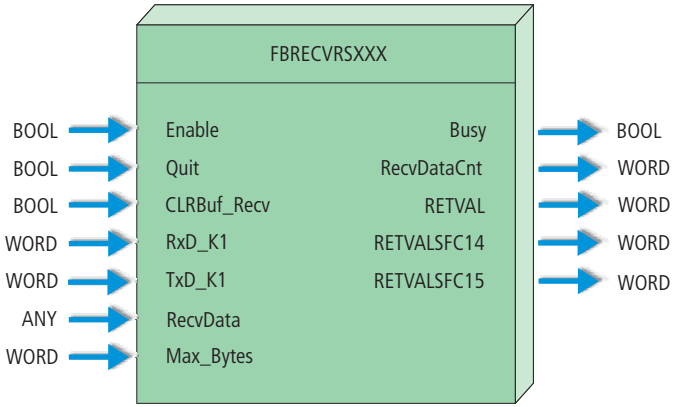

input variables

Table 104: Input variables of FBRECVRSxxx

Variable	Meaning
Enable	1: The receive of data s released. 0: The receive of data s blocked.
Quit	1: The error messages are reset (Acknowledge of errors) The communication is stopped. 0: If error messages have occurred, they remain valid.
CLRBuf_Recv	1: Flushing the receive-buffer is planned. Flushing is always executed successfully, if: Enable = 0 and Quit = 1 0: No influence on the module's function.
RxD_K1	Start address of the module's 8-byte input address range. The software SIMATIC STEP 7 assigns the address ranges to the different modules. The „Hardware-Configuration“ of the software shows the address ranges chosen by the user. The addresses are set in the WORD format (2 Bytes). Example: The decimal number 258 has to be transmitted as the hexadecimal code W#16#102.

	TxD_K1	Start address of the module's 8-byte output address range. The software SIMATIC STEP 7 assigns the address ranges to the different modules. The „Hardware-Configuration“ of the software shows the address ranges chosen by the user. The addresses are set in the WORD format (2 Bytes). Example: The decimal number 258 has to be transmitted as the hexadecimal code W#16#102.
	RecvData	Start address for storing the receive-data. (inputs, outputs, flags, data blocks etc.).
	Max_Bytes	Maximum number of bytes that have to be received (max. 65536 bytes).

Output variables

Table 105: Output variables FBRECVRSxxx

Variable	Meaning
Busy	1: Data are received actually. 0: No data are received at the moment.
RecDataCnt	Number of the received data (max. 65536).
RETVAL	Return values of the function (status or error code) – 0 → no error – 8010h → communication error: hardware error – 8020h → communication error: error in data flow – 8040h → communication error: error in telegram frame – 8080h → communication error: buffer overflow of the module – 8300h → variable error: wrong parameter „RecData“ – 8301h → variable error: wrong data type of parameter „RecData“ – 8302h → variable error: wrong length of parameter „RecData“
RETVALSFC14	see Siemens software manual
RETVALSFC15	see Siemens software manual

Transmit and Receive Function Block FBSRRSxxx

The function block FBSRRSxxx is a handling block for simultaneous transmission and receive of data from the BL20-1RS232 module.

Figure 80: Transmit/ receive function block FBSRRSxxx

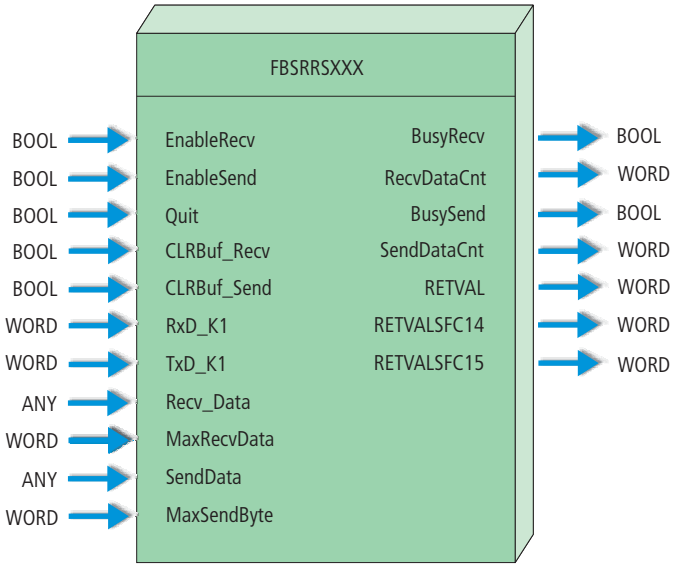

Table 106: input variables des FBSRRSxxx

Variable	Meaning
EnableRecv	1: The receive of data s released. 0: The receive of data s blocked.
EnableSend	1: The transmission of data is released. 0: The transmission of data is blocked.
Quit	1: The error messages are reset (Acknowledge of errors) The communication is stopped. 0: If error messages have occurred, they remain valid.
CLRBuf_Recv	1: Flushing the receive-buffer is planned. Flushing is always executed successfully, if: EnableRecv = 0 and Quit = 1 0: No influence on the module's function.
CLRBuf_Send	1: Flushing the transmit-buffer is planned. Flushing is always executed successfully, if: EnableSend = 0 and Quit = 1 0: No influence on the module's function.
RxD_K1	Start address of the module's 8-byte input address range. The software SIMATIC STEP 7 assigns the address ranges to the different modules. The „Hardware-Configuration“ of the software shows the address ranges chosen by the user. The addresses are set in the WORD format (2 Bytes). Example: The decimal number 258 has to be transmitted as the hexadecimal code W#16#102.

	TxD_K1	Start address of the module's 8-byte output address range. The software SIMATIC STEP 7 assigns the address ranges to the different modules. The „Hardware-Configuration“ of the software shows the address ranges chosen by the user. The addresses are set in the WORD format (2 Bytes). Example: The decimal number 258 has to be transmitted as the hexadecimal code W#16#102.
	RecvData	Start address for storing the receive-data. (inputs, outputs, flags, data blocks etc.).
	MaxRecvBytes	Maximum number of bytes that have to be received (max. 65536 bytes).
	SendData	Start address for storing the transmit-data. (inputs, outputs, flags, data blocks etc.).
	MaxSendBytes	Maximum number of bytes that have to be sent (max. 65536 bytes).

Table 107: output variables of FBSRRSxxx

Variable	Meaning
BusyRecv	1: Data are received actually. 0: No data are received at the moment.
RecvDataCnt	Number of the received data (max. 65536).
BusySend	1: Data are actually transmitted. 0: No data transmitted at the moment.
SendDataCnt	Number of the transmitted data (max. 65536).

	RETVAL	Return values of the function (status or error code) – 0000h → no error – 8010h → communication error: hardware error – 8020h → communication error: error in data flow – 8040h → communication error: error in telegram frame – 8080h → communication error: buffer overflow of the module – 8100h → variable error: wrong parameter „RecvData“ – 8101h → variable error: wrong data type of parameter „RecvData“ – 8102h → variable error: wrong length of parameter „RecvData“ – 8200h → variable error: wrong parameter „SendData“ – 8201h → variable error: wrong data type of parameter „SendData“ – 8202h → variable error: wrong length of parameter „SendData“
	RETVALSFC14	see Siemens software manual
	RETVALSFC15	see Siemens software manual

Function block for BL20-1SSI

The function block that was created for the SIMATIC S7 PLC system (Siemens) enables the data bytes to be exchanged between the PLC and the BL20-1SSI module, and provides in particular access to the register interface.

The system function blocks SFC14 and SFC15 from Siemens are used in order to ensure consistent data exchange. The return values are transferred transparently, and the meaning of the error numbers can be obtained from the manual “System software for S7-300/ 400”.

Figure 81: FB_SSI

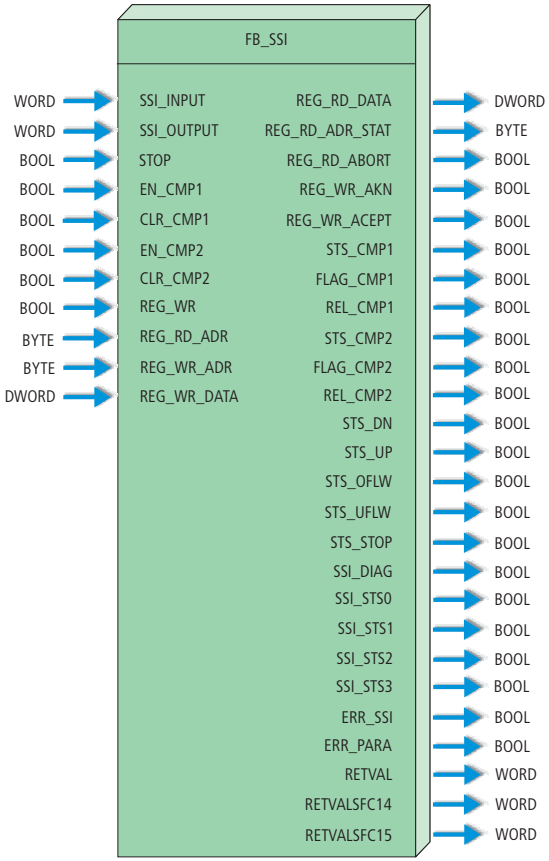

Input variables

Table 108: Input variables of FB_SSI

Variable	Meaning
SSI_INPUT	Start address for the 8-byte input address range of the BL20-1SSI module. The SIMATIC STEP 7 software assigns the address ranges to the appropriate modules. The address ranges are selected and displayed in the hardware configurator of the software. WORD format is used for the addresses and therefore consists of 2 bytes. Example: The decimal value 258 must be transferred in hexadecimal code as W#16#102.
SSI_OUTPUT	Start address for the 8-byte output address range of the BL20-1SSI module. The SIMATIC STEP 7 software assigns the address ranges to the appropriate modules. The address ranges are selected and displayed in the hardware configurator of the software. WORD format is used for the addresses and therefore consists of 2 bytes. Example: The decimal value 258 must be transferred in hexadecimal code as W#16#102
STOP	**0**: Request to read the SSI encoder cyclically **1**: Request to interrupt communication with the encoder.
EN_CMP1	**0**: Default status, i.e. the data bits REL_CMP1, STS_CMP1 and FLAG_CMP1 always have the value 0, irrespective of the actual SSI encoder value. **1**: Comparison active, i.e. the data bits REL_CMP1, STS_CMP1 and FLAG_CMP1 have a value based on the result of the comparison with the SSI encoder value.
CLR_CMP1	**0**: Default status, i.e. reset of FLAG_CMP1 not active. **1**: Reset of FLAG_CMP1 active.

Variable	Meaning
EN_CMP2	**0**: Default status, i.e. the data bits REL_CMP2, STS_CMP2 and FLAG_CMP2 always have the value 0, irrespective of the actual SSI encoder value. **1**: Comparison active, i.e. the data bits REL_CMP2, STS_CMP2 and FLAG_CMP2 have a value based on the result of the comparison with the SSI encoder value.
CLR_CMP2	**0**: Default status, i.e. reset of FLAG_CMP2 not active. **1**: Reset of FLAG_CMP2 active.
REG_WR	**0**: Default status, i.e. there is no request to overwrite the content of the register with the address stated at REG_WR_ADR with REG_WR_DATA. Bit REG_WR_AKN (output variable) is reset from 1 to 0 if necessary. **1**: Request to overwrite the content of the register with the address stated at REG_WR_ADR with REG_WR_DATA.
REG_RD_ADR	Address of the register to be read.
REG_WR_ADR	Address of the register to be written with REG_WR_DATA.
REG_WR_DATA	Value to be written to the register with the address stated at REG_WR_ADR.

Output variables

Table 109: Output variables FB_SSI

Variable	Meaning
REG_RD_DATA	Read data at the register with the address stated at REG_RD_ADR if access is successful (REG_RD_ABORT = 0).
REG_RD_ADR_STAT	Return the register address for the read data REG_RD_DATA.
REG_RD_ABORT	**1**: Reading of register with the address stated at REG_RD_ADR ould not be executed successfully. The operation was aborted. **0**: Reading of register with the address stated at REG_RD_ADR was executed successfully. The read data is shown at REG_RD_DATA.
REG_WR_AKN	**1**: Writing of the register was requested with REG_WR = 1 in the previous cycle. Another write request with REG_WR = 1 is not accepted. This value returns to 0 when REG_WR = 0. **0**: A write request with REG_WR = 1 is accepted. This value then changes to 1. A further write request is ignored.
REG_WR_ACEPT	**1**: Writing of register with the address stated at REG_WR_ADR was executed successfully. **0**: Writing of register with the address stated at REG_WR_ADR was not executed successfully.
STS_CMP1	**0**: A comparison of the register contents has produced the following result: (REG_SSI_POS) ≠ (REG_CMP1) **1**: A comparison of the register contents has produced the following result: (REG_SSI_POS) = (REG_CMP1)

Variable	Bedeutung
FLAG_CMP1	**0**: Default status, i.e. the register contents have not yet matched (REG_SSI_POS) = (REG_CMP1) since the last reset. **1**: The contents of the registers match: (REG_SSI_POS) = (REG_CMP1). This marker must be reset with bit CLR_CMP1 = 1.
REL_CMP1	**0**: A comparison of the register contents has produced the following result: (REG_SSI_POS) < (REG_CMP1) **1**: A comparison of the register contents has produced the following result: (REG_SSI_POS) ≥ (REG_CMP1)
STS_CMP2	**0**: A comparison of the register contents has produced the following result: (REG_SSI_POS) ≠ (REG_CMP2) **1**: A comparison of the register contents has produced the following result: (REG_ SSI_POS) = (REG_CMP2)
FLAG_CMP2	**0**: Default status, i.e. the register contents have not yet matched (REG_SSI_POS) = (REG_CMP2) since the last reset. **1**: The contents of the registers match: (REG_SSI_POS) = (REG_CMP2). This marker must be reset with bit CLR_CMP2 = 1.
REL_CMP2	**0**: A comparison of the register contents has produced the following result: (REG_SSI_POS) < (REG_CMP2) **1**: A comparison of the register contents has produced the following result: (REG_SSI_POS) ≥ (REG_CMP2)
STS_DN	**0**: The SSI encoder values are incremented or the SSI encoder values are constant. **1**: The SSI encoder values are decremented.

Variable	Meaning
STS_UP	**0**: The SSI encoder values are decremented or the SSI encoder values are constant. If STS_DN = 0 at the same time, this means that the SSI encoder has stopped. **1**: The SSI encoder values are incremented.
STS_OFLW	**0**: A comparison of the register contents has produced the following result: (REG_SSI_POS) ≠ (REG_UPPER_LIMIT) **1**: A comparison of the register contents has produced the following result (REG_SSI_POS) > (REG_UPPER_LIMIT)
STS_UFLW	**0**: A comparison of the register contents has produced the following result: (REG_SSI_POS) ≥ (REG_LOWER_LIMIT) **1**: A comparison of the register contents has produced the following result: (REG_SSI_POS) < (REG_LOWER_LIMIT)
STS_STOP	**0**: The SSI encoder is read cyclically. **1**: Communication with the SSI encoder is stopped as STOP = 1.
SSI_DIAG	**0**: No enabled status signal active: SSI_STSx = 0 or no status messages of the SSI encoder present. **1**: At least one enabled status signal is active: SSI_STSx = 1
SSI_STS0	These four bits transfer the status bits of the SSI encoder with the tatus messages of the SSI module. With some SSI encoders, the status bits are transferred together with the position value.
SSI_STS1	
SSI_STS2	
SSI_STS3	
ERR_SSI	**0**: SSI encoder signal present. **1**: SSI encoder signal faulty. (e.g. due to a cable break).

Variable	Meaning
ERR_PARA	**0**: The parameter set of the module has been accepted. **1**: Operation of the module is not possible with the present parameter set.
RETVAL	Return value of the function (status or error code) **0**: Everything OK. No error **8xxxh**: Error Formal operands
RETVALSFC14	See manual “System software for S7-300/ 400, SFC14”
RETVALSFC15	See manual “System software for S7-300/ 400, SFC15”

Parameter Gateway – Assignment in Hexadecimal Format

Parameter 4

Table 110: Parameter 4 Outputs module exchange

A *Default-settings*

Outputs module exchange

Parameter in hexadecimal format	Output 0 **A**	Output substitute value	Hold current value	Exchange process data	Parameter in hexadecimal format	Output 0 **A**	Output substitute value	Hold current value	Exchange process data
00	X				0F				X
01		X			10	X			
02			X		11		X		
03				X	12			X	
04	X				13				X
05		X			14	X			
06			X		15		X		
07				X	16			X	
08	X				17				X
09		X			18	X			
0A			X		19		X		
0B				X	1A			X	
0C	X				1B				X
0D		X			1C	X			
0E			X		1D		X		

A *Default-settings*

Outputs module exchange

Parameter in hexadecimal format	Output 0 **A**	Output substitute value	Hold Current Value	Exchange Process Data	Parameter in hexadecimal format	Output 0 **A**	Output substitute value	Hold Current Value	Exchange Process Data
1E			X		27				X
1F				X	28	X			
20	X				29		X		
21		X			2A			X	
22			X		2B				X
23				X	2C	X			
24	X				2D		X		
25		X			2E			X	
26			X		2F				X

Table 111: Parameter 4 Outputs module exchange error

A *Default-settings*

Outputs module exchange error

Parameter in hexadecimal format	Output 0 **A**	Output substitute value	Hold current value	Exchange process data	Parameter in hexadecimal format	Output 0 **A**	Output substitute value	Hold current value	Exchange process data
00	X				0F				X
01	X				10	X			
02	X				11	X			
03	X				12	X			
04		X			13	X			
05		X			14		X		
06		X			15		X		
07		X			16		X		
08			X		17		X		
09			X		18			X	
0A			X		19			X	
0B			X		1A			X	
0C				X	1B			X	
0D				X	1C				X
0E				X	1D				X

A *Default-settings*

Outputs module exchange error

Parameter in hexadecimal format	Output 0 **A**	Output substitute value	Hold current value	Exchange process data	Parameter im hexadecimal format	Output 0 **A**	Output substitute value	Hold current value	Exchange process data
1E				X	27		X		
1F				X	28			X	
20	X				29			X	
21	X				2A			X	
22	X				2B			X	
23	X				2C				X
24		X			2D				X
25		X			2E				X
26		X			2F				X

Table 112: Parameter 4 Outputs fieldbus error

A *Default-settings*

Outputs fieldbus error

Parameter in hexadecimal format	Output 0**A**	Output substitute value	Hold current value	Parameter in hexadecimal format	Output 0**A**	Output substitute value	Hold current value
00	X			12		X	
01	X			13		X	
02	X			14		X	
03	X			15		X	
04	X			16		X	
05	X			17		X	
06	X			18		X	
07	X			19		X	
08	X			1A		X	
09	X			1B		X	
0A	X			1C		X	
0B	X			1D		X	
0C	X			1E		X	
0D	X			1F		X	
0E	X			20			X
0F	X			21			X
10		X		22			X
11		X		23			X

A *Default-settings*

Outputs fieldbus error

Parameter in hexadecimal format	Output 0 **A**	Output substitute value	Hold Current Value	Parameter in hexadecimal format	Output 0 **A**	Output substitute value	Hold Current Value
20			X	28			X
21			X	29			X
22			X	2A			X
23			X	2B			X
24			X	2C			X
25			X	2D			X
26			X	2E			X
27			X	2F			X

Parameter 5

Table 113: Parameter 5 Integer Data format

A *Default-settings*

Integer Data format

Parameter in hexadecimal format	LSB first **A**	MSB first	Parameter in hexadecimal format	LSB first **A**	MSB first	Parameter in hexadecimal format	LSB first **A**	MSB first
00	X		0B		X	16	X	
01		X	0C	X		17		X
02	X		0D		X	18	X	
03		X	0E	X		19		X
04	X		0F		X	1A	X	
05		X	10	X		1B		X
06	X		11		X	1C	X	
07		X	12	X		1D		X
08	X		13		X	1E	X	
09		X	14	X		1F		X
0A	X		15		X			

Table 114: Parameter 5 Diagnostics all Modules

A *Default-settings*

Diagnostics all Modules

Parameter in hexadecimal format	activate **A**	deactivate	Parameter in hexadecimal format	activate **A**	deactivate	Parameter in hexadecimal format	activate **A**	deactivate
00	X		0B		X	16		X
01	X		0C	X		17		X
02		X	0D	X		18	X	
03		X	0E		X	19	X	
04	X		0F		X	1A		X
05	X		10	X		1B		X
06		X	11	X		1C	X	
07		X	12		X	1D	X	
08	X		13		X	1E		X
09	X		14	X		1F		X
0A		X	15	X				

Table 115: Parameter 5 Station configuration

A *Default-settings*

Station configuration

Parameter in hexadecimal format	Do not allow changes **A**	Allow changes	Parameter in hexadecimal format	Do not allow changes **A**	Allow changes	Parameter in hexadecimal format	Do not allow changes **A**	Allow changes
00	X		0B		X	16	X	
01	X		0C		X	17	X	
02	X		0D		X	18		X
03	X		0E		X	19		X
04	X		0F		X	1A		X
05	X		10	X		1B		X
06	X		11	X		1C		X
07	X		12	X		1D		X
08		X	13	X		1E		X
09		X	14	X		1F		X
0A		X	15	X				

Table 116: Parameter 5 I/Oassistant Force- Mode

A *Default-settings*

I/O*assistant* Force-Mode

Parameter in hexadecimal format	Release **A**	block	Parameter in hexadecimal format	Release **A**	lock	Parameter in hexadecimal format	Release **A**	block
00	X		0B	X		16		X
01	X		0C	X		17		X
02	X		0D	X		18		X
03	X		0E	X		19		X
04	X		0F	X		1A		X
05	X		10		X	1B		X
06	X		11		X	1C		X
07	X		12		X	1D		X
08	X		13		X	1E		X
09	X		14		X	1F		X
0A	X		15		X			

Table 117: Parameter 5 Integer Data format

A *Default-settings*

Gateway Diagnostics

Parameter in hexadecimal format	Device related Diagnostics **A**	Dev./identifier/channel-diagn.	Parameter in hexadecimal format	Device related Diagnostics **A**	Dev./identifier/channel-diagn.	Parameter in hexadecimal format	Device related Diagnostics **A**	Dev./identifier/channel-diagn.
00	X		10	X		20	X	
01	X		11	X		21		X
02	X		12	X		22		X
03	X		13	X		23		X
04	X		14	X		24		X
05	X		15	X		25		X
06	X		16	X		26		X
07	X		17	X		27		X
08	X		18	X		28		X
09	X		19	X		29		X
0A	X		1A	X		2A		X
0B	X		1B	X		2B		X
0C	X		1C	X		2C		X
0D	X		1D	X		2D		X
0E	X		1E	X		2E		X
0F	X		1F	X		2F		X

A *Default-settings*

Parameter in hexadecimal format	Device related Diagnostics **A**	Dev./identifier/channel-diagn.	Parameter in hexadecimal format	Device related Diagnostics **A**	Dev./identifier/channel-diagn.	Parameter in hexadecimal format	Device related Diagnostics **A**	Dev./identifier/channel-diagn.
30		X	36		X	3C		X
31		X	37		X	3D		X
32		X	38		X	3E		X
33		X	39		X	3F		X
34		X	3A		X			X
35		X	3B		X			X

Conversion Table Decimal to Hexadecimal

Table 118: Decimal - hexadecimal

decimal	hexadecimal	decimal	hexadecimal	decimal	hexadecimal	decimal	hexadecimal
001	01	022	16	043	2B	064	40
002	02	023	17	044	2C	065	41
003	03	024	18	045	2D	066	42
004	04	025	19	046	2E	067	43
005	05	026	1A	047	2F	068	44
006	06	027	1B	048	30	069	45
007	07	028	1C	049	31	070	46
008	08	029	1D	050	32	071	47
009	09	030	1E	051	33	072	48
010	0A	031	1F	052	34	073	49
011	0B	032	20	053	35	074	4A
012	0C	033	21	054	36	075	4B
013	0D	034	22	055	37	076	4C
014	0E	035	23	056	38	077	4D
015	0F	036	24	057	39	078	4E
016	10	037	25	058	3A	079	4F
017	11	038	26	059	3B	080	50
018	12	039	27	060	3C	081	51
019	13	040	28	061	3D	082	52
020	14	041	29	062	3E	083	53
021	15	042	2A	063	3F	084	54

decimal	hexadecimal	decimal	hexadecimal	decimal	hexadecimal	decimal	hexadecimal
85	55	096	60	107	6B	118	76
086	56	097	61	108	6C	119	77
087	57	098	62	109	6D	120	78
088	58	099	63	110	6E	121	79
089	59	100	64	111	6F	122	7A
090	5A	101	65	112	70	123	7B
091	5B	102	66	113	71	124	7C
092	5C	103	67	114	72	125	7D
093	5D	104	68	115	73		
094	5E	105	69	116	74		
095	5F	106	6A	117	75		

BL20 Accessories

Labels (for labeling electronics modules):

- BL20-LABEL/SCHEIBE (DIN A5 sheets, slice, perforated (laser printer) 5 x 57 labels)
- BL20-LABEL/BLOCK (DIN A5 sheets, block, perforated (laser printer) 5 x 6 labels)

Markers for labeling base modules:

Color markers for clear identification of the connection level on the base module (strip of 6):

-)BL20-ANBZ-BL Blue
- BL20-ANBZ-RT Red
- BL20-ANBZ-GN Green
- BL20-ANBZ-SW Black
- BL20-ANBZ-BR Brown
- BL20-ANBZ-RT/BL-BED Red / blue
- BL20-ANBZ-GN/GE-BED Green / yellow
- BL20-ANBZ-WS White

Dekafix Connector markers:

- FW5/1-50 labeled 51-100
- FW5/51-100 labeled 51-100
- FW5/101-150 labeled 101-150
- FW5/151-200 labeled 151-200

Jumpers for relays (QVR):

For bridging the 4th connection level (14/24) of base modules for relays

- BL20-QV/1 — 1 grid
- BL20-QV/2 — 2 grid
- BL20-QV/3 — 3 grid
- BL20-QV/4 — 4 grid
- BL20-QV/5 — 5 grid
- BL20-QV/6 — 6 grid
- BL20-QV/7 — 7 grid
- BL20-QV/8 — 8 grid

Coding for electronics and base modules:

- BL20-KO/2 — BL20-*DI-24VDC
- BL20-KO/6 — BL20-*DO-24VDC
- BL20-KO/8 — BL20-2DO-R-NO
- BL20-KO/9 — BL20-2DO-R-NC
- BL20-KO/10 — BL20-2DO-R-CO
- BL20-KO/11 — BL20-*AI-I(0/4...20MA)
- BL20-KO/12 — BL20-*AI-U(-10/0...+10V)
- BL20-KO/13 — BL20-*AO-I(0/4...20MA)
- BL20-KO/14 — BL20-*AO-U(-10/0...+10V)
- BL20-KO/16 — power distribution modules 24 V DC
- BL20-KO/17 — BL20-PF-120/230VAC-D

Software and accessories

- SW-I/OASSISTANT I/Oassistant CD-ROM
- I/O-ASSISTANT-KABEL-BL20/BL67
  I/Oassistant package

Mechanical accessories

- BL20-ABPL
  End plate
  (mechanical termination of the BL20 station on the right-hand side)
- BL20-WEW-35/2-SW
  End bracket, black
  (mechanical fixing of the BL20 station)

Electrical accessories

- BL20-SCH-1
  Shield connection for direct wiring of BL20 gateway
- BL20-KLBU/T:
  Shield connection for analog signals with tension clamp
- BL20-KLBU/S:
  Shield connection for analog signals with screw connection
- PS416-ZBX-405:
  Ferrite ring for damping high-frequency interference signals to data and supply lines

Tools:

- BL20-ZBW2 Tension clamp operating tool

Documentation:

- BL20 Manual PROFIBUS-DP D300458
- BL20 Manual DeviceNet D300460
- BL20 Manual I/O Modules D300717
- Catalog “Fieldbus components for PROFIBUS-DP“

10 Glossary

A

Acknowledge

Acknowledgment of a signal received.

Active metal component

Conductor or conducting component that is electrically live during operation.

Address

Identification number of, e.g. a memory position, a system or a module within a network.

Addressing

Allocation or setting of an address, e. g. for a module in a network.

Analog

Infinitely variable value, e. g. voltage. The value of an analog signal can take on any value, within certain limits.

Automation device

A device connected to a technical process with inputs and outputs for control. Programmable logic controllers (PLC) are a special group of automation devices.

B

Baud

Baud is a measure for the transmission speed of data. 1 Baud corresponds to the transmission of one bit per second (Bit/s).

Baud rate

Unit of measurement for measuring data transmission speeds in Bit/s.

Bidirectional

Working in both directions.

Bus

Bus system for data exchange, e. g. between CPU, memory and I/O levels. A bus can consist of several parallel cables for data transmission, addressing, control and power supply.

Bus cycle time

Time required for a master to serve all slaves or stations in a bus system, i. e. reading inputs and writing outputs.

Bus line

Smallest unit connected to a bus, consisting of a PLC, a coupling element for modules on the bus and a module.

Bus system

All units which communicate with one another via a bus.

C

Capacitive coupling

Electrical capacitive couplings occur between cables with different potentials. Typical sources of interference are, for example, parallel-routed signal cables, contactors and electrostatic discharges.

Coding elements

Two-piece element for the unambiguous assignment of electronic and base modules.

Configuration

Systematic arrangement of the I/O modules of a station.

CPU

Central Processing Unit. Central unit for electronic data processing, the processing core of the PC.

D

Digital

A value (e. g. a voltage) which can adopt only certain statuses within a finite set, mostly defined as 0 and 1.

DIN

German acronym for German Industrial Standard.

E

EIA

Electronic Industries Association – association of electrical companies in the United States.

Electrical components

All objects that produce, convert, transmit, distribute or utilize electrical power (e. g. conductors, cable, machines, control devices).

EMC

Electromagnetic compatibility – the ability of an electrical part to operate in a specific environment without fault and without exerting a negative influence on its environment.

EN

German acronym for European Standard.

ESD

Electrostatic Discharge.

F

Field power supply

Voltage supply for devices in the field as well as the signal voltage.

Fieldbus

Data network on sensor/actuator level. A fieldbus connects the equipment on the field level. Characteristics of a fieldbus are a high transmission security and real-time behavior.

G

GND

Abbreviation of ground (potential „0“).

Ground

Expression used in electrical engineering to describe an area whose electrical potential is equal to zero at any given point. In neutral grounding devices, the potential is not necessarily zero, and one speaks of the ground reference.

Ground connection

One or more components that have a good and direct contact to earth.

Ground reference

Potential of ground in a neutral grounding device. Unlike earth whose potential is always zero, it may have a potential other than zero.

GSD

Acronym for Electronic Device Data Sheet which contains standardized PROFIBUS DP station descriptions. They simplify the planning of the DP master and slaves. Default language is English.

H

Hexadecimal

System of representing numbers in base 16 with the digits 0 ... 9, and further with the letters A, B, C, D, E and F.

Hysteresis

A sensor can get caught up at a certain point, and then “waver“ at this position. This condition results in the counter content fluctuating around a given value. Should a reference value be within this fluctuating range, then the relevant output would be turned on and off in rhythm with the fluctuating signal.

I

I/O

Input/output.

Impedance

Total effective resistance that a component or circuit has for an alternating current at a specific frequency.

Inactive metal components

Conductive components that cannot be touched and are electrically isolated from active metal components by insulation, but can adopt voltage in the event of a fault.

Inductive coupling

Magnetic inductive couplings occur between two cables through which an electrical current is flowing. The magnetic effect caused by the electrical currents induces an interference voltage. Typical sources of interference are for example, transformers, motors, parallel-routed network and HF signal cables.

Intelligent modules

Intelligent modules are modules with an internal memory, able to transmit certain commands (e. g. substitute values and others).

L

Laod value

Predefined value for the counter module with which the count process begins.

Lightning protection

All measures taken to protect a system from damage due to overvoltages caused by lightning strike.

Low impedance connection

Connection with a low AC impedance.

LSB

Least Significant Bit

M

Mass

All interconnected inactive components that do not take on a dangerous touch potential in the case of a fault.

Master

Station in a bus system that controls the communication between the other stations.

Master/slave mode

Mode of operation in which a station acting as a master controls the communication between other stations in a bus system.

Module bus

The module bus is the internal bus in a BL20 station. The BL20 modules communicate with the gateway via the module bus which is independent of the fieldbus.

MSB

Most Significant Bit

Multi-master mode

Operating mode in which all stations in a system communicate with equal rights via the bus.

N

Namur

German acronym for an association concerned with standardizing measurement and control engineering. Namur initiators are special versions of the two-wire initiators. Namur initiators are characterized by their high immunity to

interference and operating reliability, due to their special construction (low internal resistance, few components and compact design).

O

Overhead

System administration time required by the system for each transmission cycle.

P

PLC

Programmable Logic Controller.

Potential compensation

The alignment of electrical levels of electrical components and external conductive components by means of an electrical connection.

Potential free

Galvanic isolation of the reference potentials in I/O modules of the control and load circuits.

Potential linked

Electrical connection of the reference potentials in I/O modules of the control and load circuits.

PROFIBUS-DP

PROFIBUS bus system with DP protocol. DP stands for decentralized periphery. PROFIBUS-DP is based on DIN 19245 Parts 1 + 3 and has been integrated into the European fieldbus standard EN 50170.
It ensures a fast cyclic data exchange between the central DP master and the decentralized periphery devices (slaves). Its universal use is realized by the multi master concept.

PROFIBUS-DP address

Each PROFIBUS-DP module is assigned an explicit PROFIBUS-DP address, with which it can be queried by the master.

PROFIBUS-DP master

The PROFIBUS-DP master is the central station on the bus and controls access of all stations to PROFIBUS.

PROFIBUS-DP slave

PROFIBUS-DP slaves are queried by the PROFIBUS-DP master and exchange data with the master on request.

Protective earth

Electrical conductor for protection against dangerous shock currents. Generally represented by PE (protective earth).

R

Radiation coupling

A radiation coupling appears when an electromagnetic wave hits a conductive structure. Voltages and currents are induced by the collision. Typical sources of interference are for example, sparking gaps (spark plugs, commutators from electric motors) and transmitters (e. g. radio), that are operated near to conducting structures.

Reaction time

The time required in a bus system between a reading operation being sent and the receipt of an answer. It is the time required by an input module to change a signal at its input until the signal is sent to the bus system.

Reference potential

Potential from which all voltages of connected circuits are viewed and/or measured.

Repeater

The phase and the amplitude of the electric data signals are regenerated during the transmission process by the repeater.
Further, it is possible to change the topology of the PROFIBUS network. It can be extended considerably by means of the repeater.

Root-connecting

Creating a new potential group using a power distribution module. This allows sensors and loads to be supplied individually.

RS 485

Serial interface in accordance with EIA standards, for fast data transmission via multiple transmitters.

S

Serial

Type of information transmission, by which data is transmitted bit by bit via a cable.

Setting parameters

Setting parameters of individual stations on the bus and their modules in the configuration software of the master.

Shield

Conductive screen of cables, enclosures and cabinets.

Shielding

Description of all measures and devices used to join installation components to the shield.

Short-circuit proof

Characteristic of electrical components. A short-circuit proof part withstands thermal and dynamic loads which can occur at its place of installation due to a short circuit.

Station

A functional unit or I/O components consisting of a number of elements.

SUB-D connector

9-pin connector for connecting the fieldbus to the I/O-stations.

T

Terminating resistance

Resistor on both ends of a bus cable used to prevent interfering signal reflections and which provides bus cable matching. Terminating resistors must always be the last component at the end of a bus segment.

To ground

Connection of a conductive component with the grounding connection via a grounding installation.

Topology

Geometrical structure of a network or the circuitry arrangement.

U

UART

Universal Asynchronous Receiver/Transmitter. UART is a logic circuit which is used to convert an asynchronous serial data sequence to a parallel bit sequence or vice versa.

Unidirectional

Working in one direction.

11 Index

A
approvals 3-14

B
base modules 1-9
BL20 components 1-4
bus connection 6-18

C
cable routing 6-2
channel specific diagnosis 3-91
count mode
– data image 7-2
C-rail (cross connection) 5-24

D
device related diagnosis 3-82
Diagnostic functions,
PROFIBUS-DP 2-11
diagnostics
– gateway 3-75
– modules 3-82
Division 2 8-1
documentation concept 0-2

E
electronics modules 1-7
EMC 6-8
end bracket 1-11
end plate 1-11

F
firmware download 5-29
Force Mode 3-81
function blocks
– receive function block 9-7
– RS232 9-2
– transmit function block 9-3
– transmit/receive function block 9-11

G
gateway 1-4

I
installation
– non-isolated 6-7

J
jumper 1-12

L
labels 1-13
lightning protection 6-3

M
markers 1-13
measurement mode
– data image 7-22
module arrangement 5-2

P
Parameter Gateway 9-22
potentail groups 5-21
potential compensation 6-15
power distribution 1-6
power supply 5-14
product overview 1-1
PROFIBUS-DP
– decentralized periphery 2-2

R
RS232
– process input data 7-50
– process output data 7-52
RS485/422
– process input data 7-55
– process output data 7-57

S
shield connection
– analog modules 1-14

– gateway 1-13
SSI
– process input data 7-60
– process output data 7-67
station planning 5-1
symbols 0-4
System configuration,
PROFIBUS-DP 2-4
System expansion,
PROFIBUS-DP 2-7
system extension 5-3
System overview,
PROFIBUS-DP 2-2

T
Topology, PROFIBUS-DP 2-6
transmission cables 6-4
Transmission rate, PROFIBUS-DP 2-8

U
use, prescribed 0-3

Z
Zone 2 8-1

TURCK

Industrial
Automation

Hans Turck GmbH & Co. KG
45472 Mülheim an der Ruhr
Germany
Witzlebenstraße 7
Tel. +49 (0) 208 4952-0
Fax +49 (0) 208 4952-264
E-Mail more@turck.com
Internet www.turck.com

www.turck.com

D300458 0308

Subject to change without notice